# Wireless and Mobile Communication

#borhan #cste #nstu #ASH2101008

**References:**

- *Lecture sheet from sir*
- *Airin apu's note*
- Mobile Communications ~ Jochen Schiller

# Modulation

Modulation is the process by which **data or information** converted into **electrical or digital signals**for transferring that signal over a medium.

**Fundamental elements :**

- High Frequency Carrier Wave
- Modulating signal or input signal or message signal

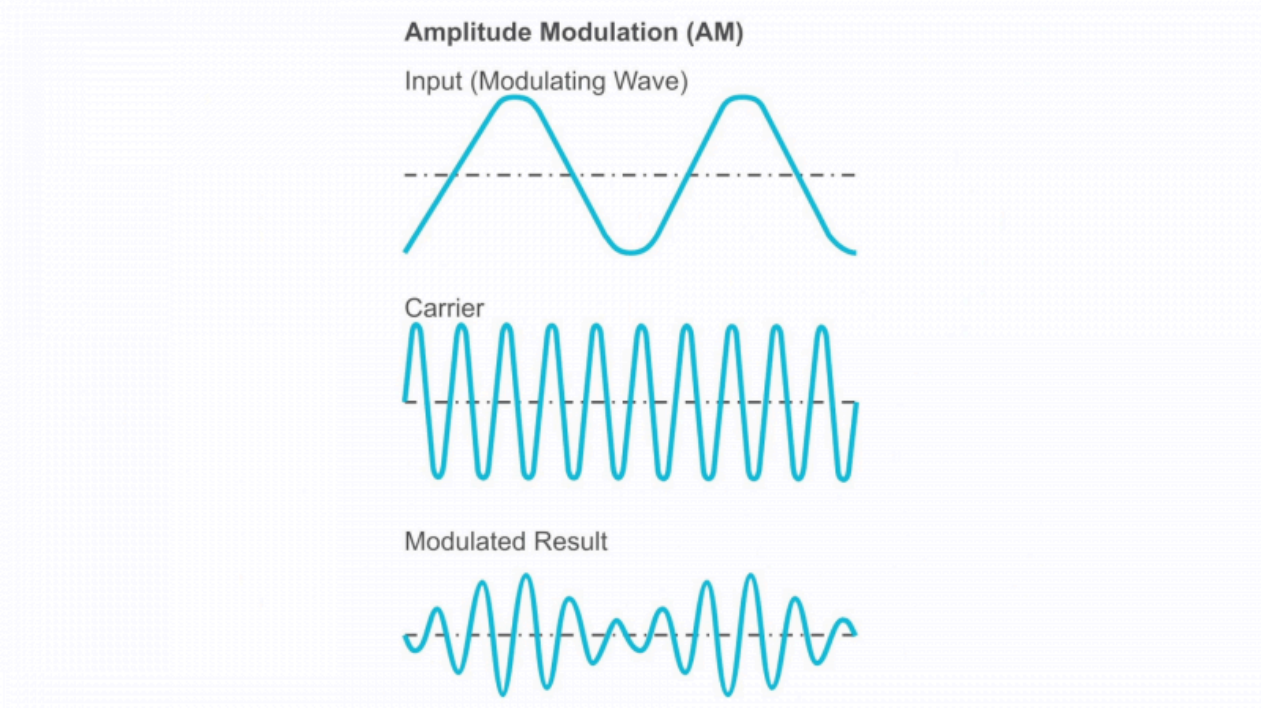


A carrier wave can be represented as a sine or cosine wave,
$c(t) = A_c sin(\omega_c t + \theta)$

**Why do we need modulation**

1. Fast transmission
2. Increase the strength of the message signal so that it can travel longer
3. Noise can be minimized

**Difference between modulation and demodulation**

| Based on | Modulation | Demodulation |
|---|---|---|
| **Process of** | Encoding information in a transmitted signal | Decoding information from the transmitted signal |
| **Performed at** | Transmission end | Receiving end |
| **Message signal** | is added on carrier wave | is separated from a carrier wave |
| **Modulation Process** | Simple | Complex |
| **Parameters of the signal (frequency, amplitude, phase) is transformed** | low to high value | high to low value |
| **Circuit name** | Modulator | Demodulator |

**Similarities between modulation and modulation**

1. A modem is an equipment that performs both modulation and demodulation
2. Both processes aim to achieve transfer information with minimum distortion, minimum loss and efficient utilization of spectrum.
3. Dependence of each other. Neither process is useful alone. Modulation without demodulation means receiver can't understand the signal; demodulation without modulation means there's nothing to decode.
4. Each process use the carrier wave.

**Types of modulation/Analog-to-Analog Modulation**
Analog-to-Analog Modulation is a technique used in communication systems where and **analog information signal** (like voice) is transmitted over long distances by modifying the characteristics of a **high-frequency analog carrier wave**.

| | Amplitude Modulation | Phase Modulation | Frequency Modulation |
|---|---|---|---|
| **It is a kind of modulation where** | the **amplitude of the carrier signal is changed** accordance to the message signal while the **phase and frequency are kept constant**. | the phase of the carrier signal is changed according to the low frequency of the message signal | the frequency of the carrier signal is altered in accordance to the message signal while the phase and amplitude are kept constant. |
| **Bandwidth, ($B =$ the BW of the** | $B_{AM} = 2B$<br>Lowest | $B_{PM} = 2(1+\beta)B$<br>$\beta$ is $2$ most often<br>Moderate | $B_{FM} = 2(1+\beta)B$<br>$\beta$ is usually $4$<br>Highest |

| | Amplitude Modulation | Phase Modulation | Frequency Modulation |
|---|---|---|---|
| **modulating signal)** | | | |
| | 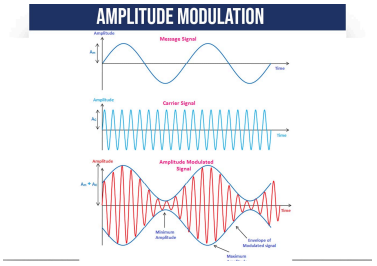 | 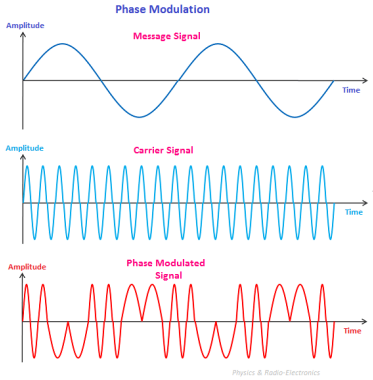 | 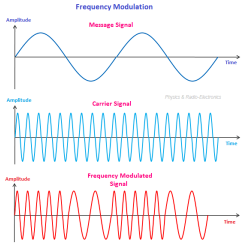 |
| **Noise resistance** | Poor | Good | Excellent |
| **Power Efficient** | Less | More | More |
| **Complexity** | Simple to implement | Complex | Complex |
| **Equation form** | $c(t) = [A_c + m(t)]\sin(\omega_c t)$ | $c(t) = A_c \sin(\omega_c t + k_p m(t))$ | $c(t) = A_c[(\sin(\omega_c t + k_p m(t)))t]$ |

**Digital to Analog Conversion**

**Digital to analog conversion is the process of** changing one of the characteristics of an analog signal** based on the information of digital data.

**Bit rate** $N$ **:** It is the number of bits per second $(bps)$.

**Baud rate** $S$**:** It is the number of signal elements per second $(bauds)$.

$S = \frac{N}{r}$bauds , $r =$ number of data bits per signal element

$r = \log_2 L$, $L =$ Levels or number of signal elements

**Three types *(Also known as Quadrature Amplitude Modulation. QAM)*:**

| Based on | Amplitude Shift Keying | Frequency Shift Keying | Phase Shift Keying |
|---|---|---|---|
| **Definition** | In ASK, the amplitude of a carrier signal is changed to reflect the amplitude levels in the digital signal. | FSK is a digital modulation technique in which the frequency of the carrier wave is shifted between distinct values to represent digital symbol. | the phase of the carrier signal is shifted to represent digital data. |

| Based on | Amplitude Shift Keying | Frequency Shift Keying | Phase Shift Keying |
|---|---|---|---|
| **Bandwidth** | $B = (1+d)S,$ $d \epsilon (0,1)$ | $B = (1+d)S + 2\Delta F$ **Multilevel FSK,** $B = (1+d)S + \frac{L-1}{2\Delta F}$ $= L \times S$ | $B = (1+d)S$ |
| **Signal** | 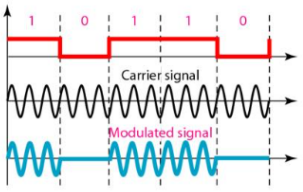 | 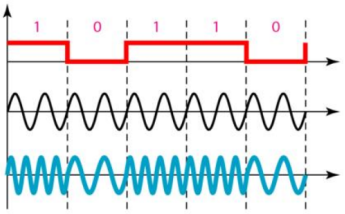 | 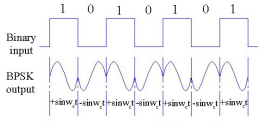 <br>Figure 3: Output of a BPSK modulator circuit for a 1010101 input |
| **Implementation Circuit** | 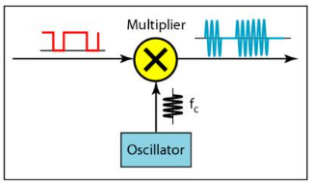 | 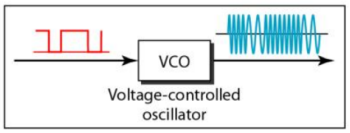 | 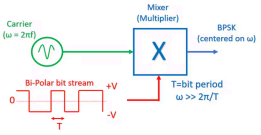 |
| **Binary Representation** | $1 = \text{High amplitude}$ $0 = \text{Low}$ | $1 = \text{High Frequency}$ $0 = \text{Low}$ | $1 = \text{phase shift}$ $0 = \text{no shift}$ |
| **Signal Complexity** | Simple | Moderate | Complex |
| **Bandwidth Requirement** | Low | Higher than ASK | Moderate |
| **Noise Immunity** | Poor | Better than ASK | Best among all |
| **Implementation** | Easiest | Moderate | Complex |
| **Date rate** | Moderate | Moderate | HIgh |
| **Appication** | Optical Fiber, RFIS | Radio Transmission modems | WiFi, Satellite, Bluetooth |

| Approach | SDMA | TDMA | FDMA | CDMA |
|---|---|---|---|---|
| **Idea** | Segment space into cells/sectors | Segment sending time into disjoint time-slots, demand driven or fixed patterns | Segment the frequency band into disjoint sub-bands | Spread the spectrum using orthogonal codes |
| **Terminals** | Only one terminal can be active in one cell/one sector | All terminals are active for short periods of time on the same frequency | Every terminal has its own frequency, uninterrupted | All terminals can be active at the same place at the same moment, uninterrupted |
| **Signal separation** | Cell structure directed antennas | Synchronization in the time domain | Filtering in the frequency domain | Code plus special receivers |
| **Advantages** | Very simple, increases capacity per $km^2$ | Established, fully digital, very flexible | Simple, established, robust | Flexible, less planning needed, soft handover |
| **Disadvantages** | Inflexible, antennas typically fixed | Guard space needed (multi-path propagation), synchronization difficult | Inflexible, frequencies are a scarce resource | Complex receivers, needs more complicated power control for senders |
| **Comment** | Only in combination with TDMA, FDMA or CDMA useful | Standard in fixed networks, together with FDMA/SDMA used in many mobile networks | Typically combined with TDMA (frequency hopping patterns) and SDMA (frequency reuse) | Used in many 3G systems, higher complexity, lowered expectations; integrated with TDMA/FDMA |

**Analog to Digital Conversion**

**Analog-to-Digital Conversion (ADC) is the process of transforming** continuous-time, continuous-amplitude analog signal **into** discrete time, discrete-amplitude digital signal** that can be processed, stored or transmitted by digital system.

| Based on | Pulse Code Modulation | Delta Modulation |
|---|---|---|
| **Definition** | PCM is a technique where an analog signal is sampled at regular intervals, each sample is quantized into discrete levels and | Delta Modulation is a simplified form of PCM where instead of encoding the absolute value of each sample. only the difference |

| Based on | Pulse Code Modulation | Delta Modulation |
|---|---|---|
| | then encoded into a binary sequence. | or delta between successive samples is encoded. |
| **Bit Requirements** | Multiple bits per sample | 1 bit per sample |
| **Bandwidth Usage** | Higher | Lower |
| **Complexity** | Complex | Simpler |
| **Signal Quality** | High Fidelity | Lower Fidelity |
| **Process** | **1. Sampling**<br>Analog signal is sampled every $T_s$ seconds. $T_s$ means the sample interval, $f_s = \frac{1}{T_s}$ is called sampling rate or frequency.<br> 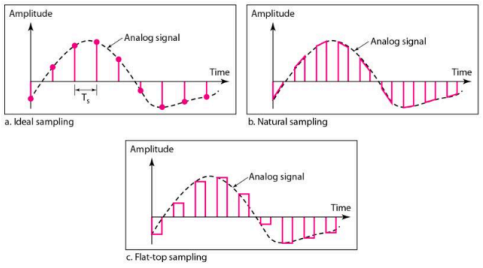 <br><br>**2. Quantization:** In PCM, the sample values are rounded to the values of certain levels. This rounding off operation is knows as quantization.<br> 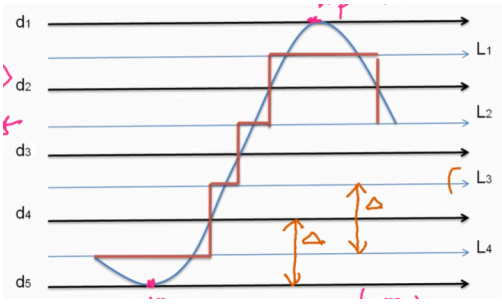 <br><br>**3. Binary Encoding**<br>Each quantized values are represented as binary numbers. These digital codes can then be stored, processed or transmitted. | 1. Sampling : Sampled at regular intervals<br>2. The current sample is compared with the previous output value. "Has the signal increased or decreased?"<br>3. If the signal increased : Output 1<br>Else : Output 0<br>4. Repeat for Next Samples<br> 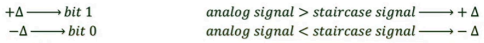 <br><br> 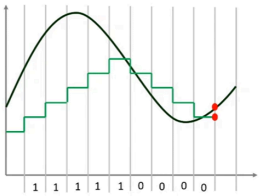 <br> |

# Multiple Access

Multiple Access refers to a set of techniques used in communication systems that **allow multiple users or devices to share the same communication channel** or medium **efficiently and simultaneously**.

| Based On | Frequency Division Multiplexing | Time Division Multiple Access | Code Division Multiple Access |
|---|---|---|---|
| **App.** | Most common **analog** (1G) multiple access method. | Popular in digital **cellular systems (2G GSM)** | **digital multiple access method** used in modern communication systems (3G). |
| **Defn.** | The frequency band is **divided into channels of equal bandwidth** so that each conversation is carried on a different frequency.<br>Guard Bands are used between two channels to **minimize** crosstalk. A guard band is the small **unused frequency ranged** placed between two communication channels. Crosstalk is **unwanted interference** where a signal from one channel **leaks** into another channel. | TDMA divides a **single frequency channel into multiple time slots**. Each user is assigned a specific time slot to transmit the data. **Guard time** : **Extra time must be reserved** between users to avoid signal overlap, which **waste** some BW. | CDMA is a **spread-spectrum** multiple access technique where multiple users share the same BW concurrently, distinguish by **unique orthogonal code**.<br><br>Spread spectrum is a technique where a signal is transmitted over a BW **much wider than the minimum required**. Orthogonality means the **cross-correlation between codes is zero**, so one's signal does not interfere with another's, |
| **Adv.** | 1. **Reduce** the bit rate information and the use of efficient numerical codes **increases the capacity**<br>2. **Equalization** is not necessary. (Equalization is the process of adjusting a signal to remove distortions caused by the communication channel.)<br>3. **Easily implemented**<br>4. Since transmission is continuous, **less number of bits are required** for synchronization and | 1. No **guard band**<br>2. No narrowband **filter**<br>3. Information rate 4 **kbps to** 120 **Mbps**<br>4. **Double** band 00/100 MHz<br>5. **Power** consumption less<br>6. Less **Cost** | 1. More **secure**<br>2. Provides **high quality of voice**<br>4. **Low power** requirements<br>4. Transmission burst **reduces interference**<br>5. Better **multiple path** execution<br>6 Soft Capacity (doesn't have fixed or hard limit on the numbers of users)<br>7. The more **codes**, the more **users**<br>8. **Transmission flexible** |

| Based On | Frequency Division Multiplexing | Time Division Multiple Access | Code Division Multiple Access |
|---|---|---|---|
| | framing.<br>5. **Fast** | | |
| **Disadv.** | 1. The **maximum flow rate** per channel is fixed and small.<br>2. Guard bands lead to a **waste** of capacity.<br>3. Suitable only for **analog** signal.<br>4. Network planning is **time-critical.** (A task must be done within a strict deadline or at the right moment.)<br>5. **Frequency planning** is time-consuming.<br>6. **Cost** more. 7. More **power** consumption | 1. High data rates of broadband system requires **complex equalization**<br>2. **High Synchronization** overhead<br>3. **Slow**<br>4. Demands **high peak power** on the **uplink** in transient mood<br>5. Can't be access **multiple user at a time** | 1. The code length must be **carefully selected**. A large length may delay or cause interference.<br>2. **Code synchronization** is required<br>3. Can't offer **international roaming**<br>4. Higher **Cost** |
| | 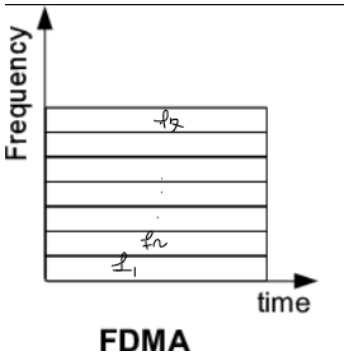 <br>**FDMA** | 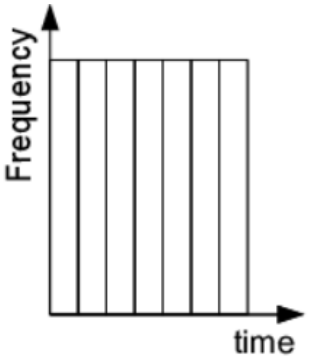 <br>**TDMA** | 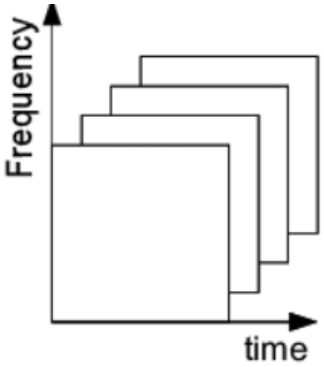 <br>**CDMA** |
| **Data rate** | Low | Medium | High |
| **Capacity** | Low | Medium | Large |
| **Cost** | High | Low | Installation = High<br>Opening = Low |
| **Handoff** | Hard<br>(When you're on a call and move from one cell tower's coverage area to another, the network has to "hand over" your connection to the new tower without dropping the call. That process is called handoff.) | Hard | **Soft** |

| Based On | Frequency Division Multiplexing | Time Division Multiple Access | Code Division Multiple Access |
|---|---|---|---|
| **Flexibility** | Low | Moderate | High |
| **Synch.** | No. | Time Synchronization | Code Sync. |
| **Complexity** | **Simpler** | Require precise timing control, leading to **higher** complexity | **Highly** complex due to the use of spreading codes and signal processing |
| **Scalability** | Limited | Limited | Highly Scalable |
| **Power Efficiency** | Power efficiency is **reduced** | Users transmit in bursts, **potentially saving power** but requiring efficient power control. | Spread spectrum techniques can lead to **higher power consumption.** |
| **Security** | Lower | Moderate | High |
| **Guard Bands or times** | Gaurd Bands | Guard Times | **No need any.** |
| **Code Word** | No | No | **Required** |
| **Mode of data transfer** | Analog Signal | Signals in bursts | Digital signal |

### How CDMA differs from FDMA and TDMA

| CDMA | TDMA |
|---|---|
| Only **one channel** occupies the entire bandwidth | All stations can send data **simultaneously**, there is no time-sharing. |

### Why CDMA is better than FDMA & TDMA

1. CDMA is **flexible**, requires **lesser frequency planning** and has a **softer handover** of signal. FDMA is not flexible and TDMA need guard space for multiple path propagation.
2. **Data rates** of CDMA is **high**. On the other hand FDMA and TDMA has low data rates.
3. **Capacity** of CDMA system is **large** but FDMA and TDMA has low capacity.
4. **Full power efficiency** is possible in CDMA.

### How CDMA works

1. **Spread Spectrum Transmission** : CDMA uses spread **spectrum technology** to transmit data. This means each user's data signal is **multiplied by a high-rate code sequence**, spreading the signal across a **wider BW** than the original data.

$d_i(\text{user data}), c_i(\text{users spreading code})$
$\text{pread the data}, s_i(t) = d_i(t)\ \ c_i(t)$

2. **Multiple Users on Once Frequency** : Multiple baseband signals, each associated with a different spreading code, can be modulated onto the same carrier frequency. This allows many users to transmit simultaneously over the same frequency band.
   $S = \ s_i = \ d_i\ \ c_i$
3. **Orthogonal Codes Minimize Interference** : Each user is assigned a **unique spreading code that is orthogonal** to the others. Orthogonal codes are mathematically designed so that their **cross-correlation is zero,** meaning they do not interfere with one another when transmitted together.
   $c_i(t)c_k(t) = 0\ (i\ \ k)$
4. **Unique Code Sequence for Each User:** Every user's signal us encoded using **distinct code sequence.** This uniqueness ensures that even though all signals are transmitted together, the **receiver can isolate and extract** the intended signal by matching it with corresponding code.
5. **Receiver Separation via Code Matching:** When signals from **multiple mobile stations arrive** at the base station, the **receiver uses the known orthogonal spreading codes to separate** each user's signal. This is done by correlating the received composite signal with each user's code.
   $S(t)\ \ c_k(t) = d_k(t)$

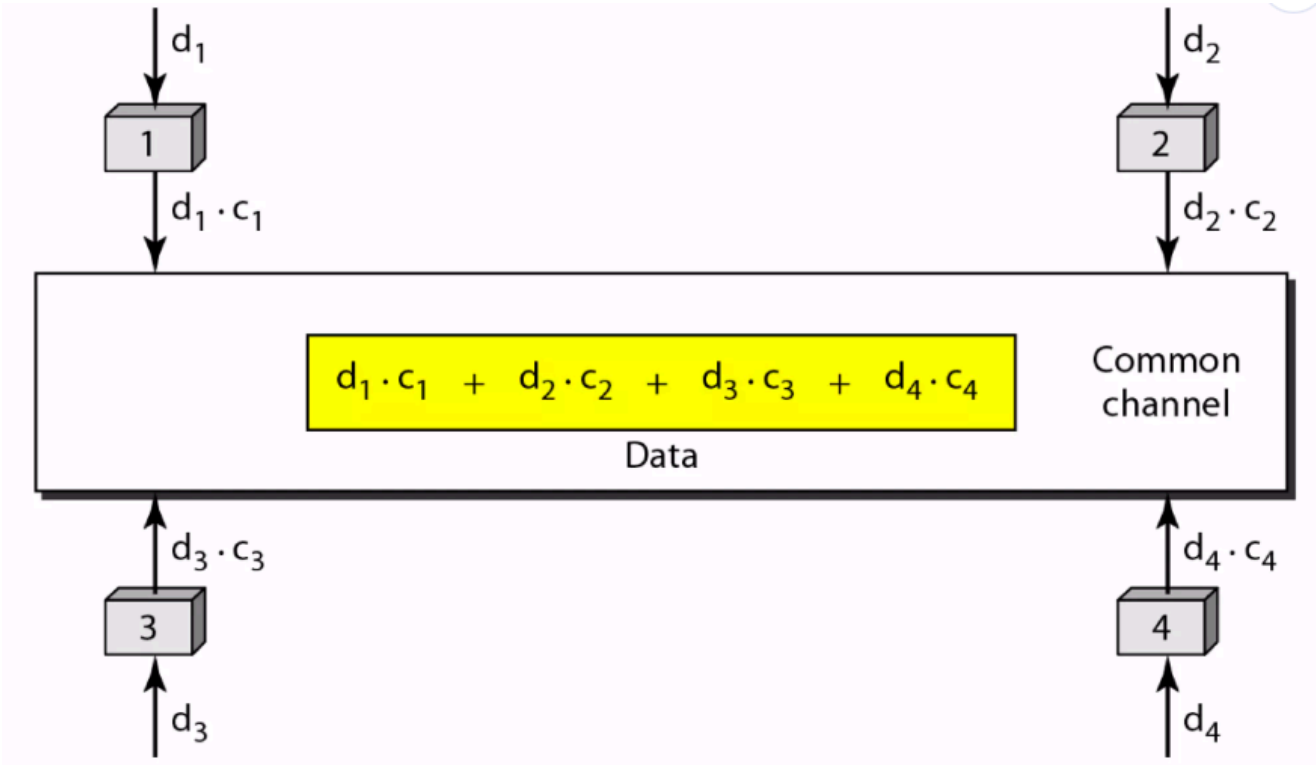


There are four stations - $1, 2,\ \text{and}\ 4$
Data assigned with respective stations as $d_1, d_2, d, d_4$
The code assigned with respective stations as $c_1, c_2, c, c_4$

**Chips**

CDMA is based on **coding theory.** Each station is assigned a code which is a **sequence of numbers called chips**. Chip sequence of four stations.
$c_1 = [+1+1+1+1], c_2 = [+1-1+1-1]$
$c = [+1+1-1-1], c_4 = [+1-1-1+1]$

We **cannot choose the sequence randomly**, we can choose orthogonal sequence and have the following properties:

1. Each sequence is made by $N$ **elements**, when $N$ is the number of stations and needs to be $\text{power of } 2$
2. Multiply by a number,
   $2 \times [+1+1+1-1] = [+2+2+2-2]$
3. If we **multiply two equal sequence** element by element and add the result we get $4$
   $[+1+1-1-1] \times [+1+1-1-1] = +1+1+1+1 = 4$
4. If we **multiply two different sequence**, we get $0$
   $[+1+1-1-1] \times [+1+1-1+1] = +1+1-1-1 = 0$
5. **Adding two sequences** mean adding the corresponding element,
   $[+1+1+1+1] + [+1-1-1+1] = [+2+0+0+2]$

**CDMA Calculation**

| Data bit | 0 | 1 | Silence |
|---|---|---|---|
| Replacement | -1 | +1 | 0 |

**Data :** $d_1, d_2, \quad , d_n$, Replace based on the table
**Chip :** $c_1, c_2, \quad , c_n$
**Final Data** : $= d_i \ c_i$
Now think $\text{station } t$ sends data to $\text{station } r$, $[t \text{ is transmitter}]$
Receiving data, $_r = \frac{c_t}{n} = \frac{4 \times d_t}{n}$, $[n \text{ is number of stations}]$
If $_r \ 0$, received bit $1$
If $_r \ 0$, received bit $0$

- **Digital Signal Created by Four Stations**
- **Digital Signal Creation of 1**

# Generations

A generation in mobile communication is a formally recognized **phase of wireless technology development**, characterized by a new set of **standards, infrastructure and services** that significantly improve upon the previous generation.

| | Details | BW/ Data Speed | Multiple Access | Extra |
|---|---|---|---|---|
| **1G** | wireless, analog, voice only cellular telephone, 1980s | **900** MHz **2.4** kbps | FDMA, Circuit switching | No Internet |
| **2G** | GSM standard, digital, **SMS**, **1991** in Finland, correction and detection | | TDMA, CDMA, Circuit Switching, Packet Switching, GSM | |
| **2.5G** | 2G combined with GPRS, MMS | | HSCSD, packet switched network domain | |
| **2.75G** | EDGE mobile network | **3.5x** speed than GPRS | | |
| **3G** | WCDMA, EDGE, UMTS, | 144 kbps | CDMA | **Internet**: Broadband, **Customer:** Video streaming, tv, video call, chat, music, news, location. **Business:** VPN, Video Conferences, High Speed teleworking |
| **3.5G** | HSPA, HSPDA, Fast Scheduling | | | Amplitude Modulation and Coding |
| **3.9G** | LTE, enhanced UTRA, High throughput, low latency | | | Coverage: 5km, |
| **4G** | LTE-A, Introduced LIFi, | **20** Mbps, **40x** faster than 3G | Packet and **message** switching | Internet: Ultra broadband, Technology convergence on **OFDM** |

## GSM

***Global System for Mobile (GSM)*** is *second-generation* cellular standard developed to provide **voice services and data delivery** using **digital modulation**.

GSM is a set of **protocols** that defines how mobile devices connect to cellular network. It was first developed in **Europe** in the late **1980s** and became the dominant **global standard**

for mobile communication.

**GSM Services**

1. **Tele-Services :** Voice communication via mobile, mobile telephony and emergency calling.
2. **Bearer or data services :** Various data services for *information transfer* between GSM and other networks like PSTN, ISDN etc. Other services are **SMS and voice mailbox**.
3. **Supplementary services** : Call related services, such as **call waiting, call hold, call barring, call forwarding, call conferencing** (link multiple calls together) etc.

**GSM System Architecture**

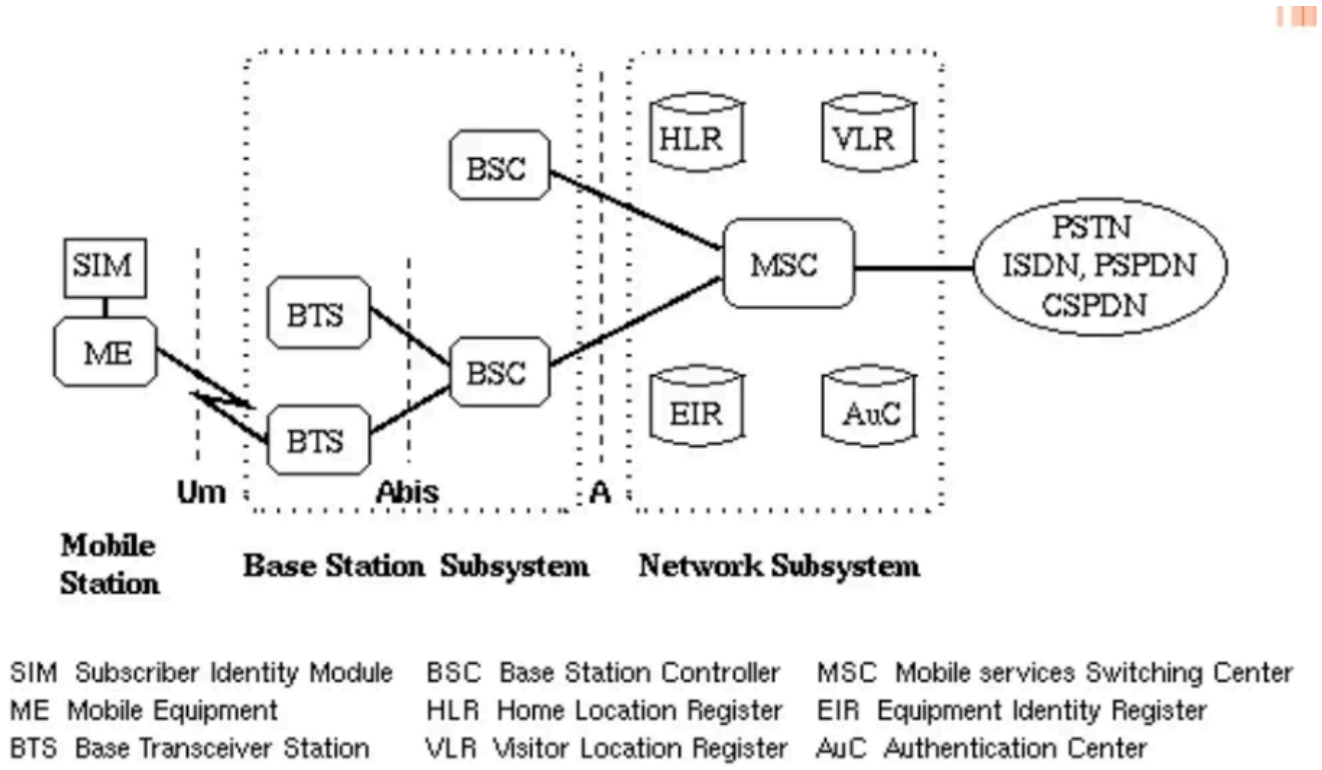


**Mobile Station** : A mobile station in GMS is the user equipment that provides the air interface to the network.
1. **Mobile Equipment (ME):** The physical hardware device used in mobile communication. Mobile phone is an electronic telecommunication device, often referred to as an cellular phone or cellphone. Mobile phones connect to a wireless communication network through radio wave or satellite transmission.
1. **Functions:**
1. Portable, hand hold device
2. Voice and data transmission
3. Power level : $0 - 20$
4. $10$ character long SMS
2. **Parts**
1. PCD (Printed Circuit Board)
2. Microphone
3. Speaker

4. Antenna
5. Battery
6. Flash/ROM
7. RF Amplifier
8. DSP - 40 MIPS
9. LED screed
3. **Mobile phone has three special code**
1. **Electronic Serial Number (ESN):** It is an unique $2-\text{digit numbers}$ programmed into the phone when it is manufactured.
2. **Mobile Identification Number (MIN):** A $10-\text{digit number}$ derived from the phone number.
3. **System Identification Code (SID):** An unique $-\text{digit}$ number that is assigned to each carrier by the **Federal Communication Commission(FCC).**
2. **Subscriber Identity Number (SIM)**: A small smart card inserted into the mobile equipment that contain subscriber-specific information. It is a smart card that stored identification information that **pinpoints a smartphone** to a specific mobile network. A sim card is a **small and rectangular**, about $2 \times 1\ \text{mm}$ and **notched** at once corner.
1. **Functions**
1. Allows user to **send and receive calls**
2. Allows user to receive other subscribed services
3. Protected by a password or PIN
4. Can be moved from phone to phone
2. **Sim code distribution**
1. **Country Code :** First $\text{digit}$, identifies the country.
2. **Network code :** Next $2\ \text{digit}$, identifies the operator
3. **Mobile Station Identification :** Last $10\ \text{digit}$

**Base Station Subsystem (BSS):** The Base Station Subsystem is the functional unit of mobile communication system responsible for providing and managing the radio interface between mobile station (MS) and the network switching subsystem (NSS).

1. **Base Transceiver Station (BTS) :** The BTS is the element of BSS that provides the **physical radio interface** between the mobile station (MS) and the network.
   - **Parts**
     - Transceiver (TRX)
     - Power Supply Unit(PSU)
     - Combiner
     - Duplexer
     - Antenna System
     - Baseband Unit
     - Cooling System
     - Alarm and Control Unit
   - **Functions**

        - Encodes, encrypts, multiplexes, modulates and feeds RF signal to the antenna
        - Communicates with mobile station and BSC
        - Consists of Transceiver units
2. **Base Station Controller (BSC):** Control multiple BTS.
    - **Parts**
        - Transcoding and Rate Adaption Unit
        - Switching Unit
        - Control Processor
        - Signaling Interfaces
        - Operation and Maintenance Subsystem (OMS)
        - Backhaul Interfaces
    - **Functions**
        - Manages **radio resources** for BTS
        - Handles call set up
        - **Handover** for each MS
        - It **communicates** with MSC and BTS

**Network Switching Subsystem (NSS) :** The Network Switching Subsystem (NSS) is the core part (protocol architecture and functional core of GSM systems) of a GSM network responsible for ***call control, mobility management and interconnection with other networks***.

1. **Mobile Switching Center (MSC):** The MSC is the **central switching node** in the NSS, responsible for **call setup, routing and mobility management**. It is the **heart of the network**.
    - **Parts**
        - Gateway MSC (GMSC)
        - Transit MSC
        - Serving MSC
    - **Functions**
        - Manages communication between GSM and other network
        - Billing information and collection
        - Call establishment, routing and termination
        - Handover management between cells or MSCs
        - **Mobility Management**
            - Registration
            - Location updating
            - Inter BSS and inter MSC call handoff
2. **Home Location Register (HLR):** The HLR is **centralized database** that *stores permanent subscriber information*, including service profiles, authentication keys and current location.

- **Parts**
  - Subscriber profile section
  - Location information section
  - Authentication Data Section
- **Functions**
  - **Stores information** about each subscriber that belong to it MSC in **permanent and temporary fashion**
  - As soon as mobile subscriber **leaves the current local area**, the information in the HLR is updated.
  - Database **contains IMSI, prepaid/postpaid, roaming, restrictions**, supplementary services
  - Works with AUC for authentication
  - Provide routing information for incoming calls/SMS

3. **Visitor Location Register (VLR):** The VLR is a **temporary database** linked to an MSC, storing subscriber data for users currently roaming in its are.
   - **Parts**
     - Subscriber Data Cache
     - Roaming Management Section
   - **Functions**
     - **Temporary database** which updates **whenever new MS enters its area,** by HLR database
     - **Controls mobiles roaming** in its area
     - Database contains I**MSI, Location Area, authentication key**
     - Updates subscriber location dynamically
4. **Authentication Center (AUC):** The AUC is a **security database** that stores **authentication and encryption parameters** to protect subscriber **identity and communication**.
   - **Parts**
     - **Key Management System**
     - **Algorithm Processor**
   - **Functions**
     - Contains the **algorithm for authentication** as well as the keys for encryption
     - Protects network operators from **fraud and unauthorized access**
     - Situated in **special protected part of the HLR**
     - Generates **encryption keys** for secure communication
     - Verifies **subscriber identity** using IMSI and Ki (Encryption Key)
5. **Equipment Identity Register (EIR)** : The EIR is a **database of mobile equipment identities** (IMEI numbers), used to **track** valid, **stolen** or **unauthorized** devices.
   - **Parts**
     - **White List**: Approved devices

    - **Black List**: Stolen or banned devices
    - **Grey List:** Devices under observation
- **Functions**
    - **Stores all devices identifications** registered for this network
    - Prevents call from **stolen, unauthorized or defective** mobile devices
    - Database that is used to **track handsets using the IMEI**
    - Ensures only authorized devices access the network
    - Support regulatory compliance and fraud prevention

### Roaming

In mobile telecommunications, **roaming** refers to the ability of a mobile subscriber to automatically access and use services (voice, SMS, data) on a network **outside their home network's coverage area**, thanks to agreements between different operators.

### Types of roaming

1. **National Roaming:** Using another operator's network within the same country.
2. **International Roaming:** Using a foreign operator's network when traveling abroad.
3. **Inter-standard roaming:** Moving between different technologies

## Handover (Handoff)

A handover is a **process** in telecommunication and mobile communication in which a connected cellular cell or a data session is **transferred from one cell site** (base station) to another without disconnecting the session.

A cell is a geographic area served by a base station and a cellular network is a system made up of many cells that work together to provide a wireless coverage. A cellular network is a type of wireless communication system where the coverage area is divided into smaller regions called cells. Each cell is served by a base station/cell tower/cell-site that transmit and receives radio signals.

**Cellular services are based on mobility and handover**, allowing the user to be moved from one from **one cell site to another** or to be **switched to the nearest cell site** for better performance. Handover is used to avoid **doppler effect.**

Accordance to physics, the doppler effect or doppler shift is the change in the frequency or wavelength of a wave due to the relative motion between the source of the wave and the observer. The Doppler Effect is the change in frequency of a signal when the source (your mobile phone) or the receiver (base station) is moving relative to each other. **This frequency shift can cause distortion, fading or loss of signal quality** in mobile communication.

### Type of Handovers

| Based On | Hard Handover | Soft Handover |
|---|---|---|
| **Defn.** | A hard handover is a process in mobile communication where the | A soft handover is a process in mobile communication where the |

| Based On | Hard Handover | Soft Handover |
|---|---|---|
| | connection where the connection with the **current cell is broken before** a new connection is established with target cell. | connection with **the current cell is maintained while** a new connection is established with the target cell. |
| **Policy** | break-before-make | make-before-break |
| **Used in** | TDMA, FDMA, **GSM** | **CDMA**, WCDMA |
| **Call drop probability** | Higher | Lower |
| **Complexity** | Simple to implement | Complex |
| **Cost** | Less | More |
| **Efficiency** | Less | More |
| **Connection** | Only one cell connection at a time | Multiple cell connections simultaneously |
| **Service Community** | Brief interruption | Seamless, smoother transition |
| **Resource Usage** | Less | More |
| **Example** | You're on a call while driving. When you move out of one tower's range, your phone drops that link and quickly connects to the next tower. You might notice a **tiny glitch** in a call quality | You're on a video call in moving train. Your phone stays linked to two towers at once, so when one signal weakens the other is already active. The call continues smoothly **without interruption.** |
| **Figures** | 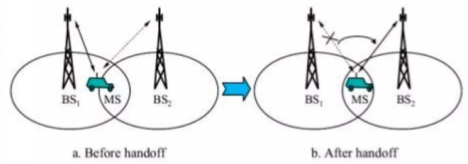  | 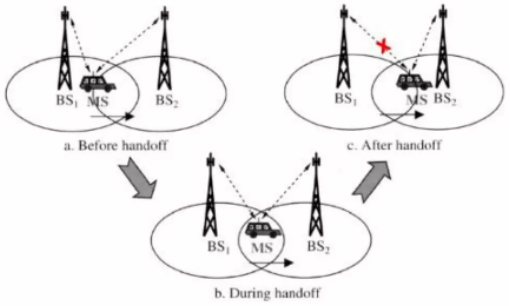  |

**Four Possible handover scenarios in GSM**

In GSM network, a handover (Europe) or Handoff (North America) is the process of transferring an ongoing call or data session from one cell to another, ensuring seamless as a mobile user moves across coverage area.

1. **Intra-cell handover:** Within a cell, **narrow band interference** could make transmission at a certain frequency impossible. The base could then decide to **change the carrier frequency.** This happens within a cell.
2. **Inter-cell intra BSC handover:** Typical. The MS moves from one cell to another, but stays within the control of the same BSC. The BSC then performs a handover, assigns a

new radio channel in the new cell and release the old one.

3. **Inter BSC, intra MSC handover:** As a BSC only controls limited number of cells; GSM also has to perform handovers between cells controlled by different BSCs. This handover then has to be controlled by the MSC.
4. **Inter MSC handover:** A handover could be required between two cells belonging to different MSCs. Now both MSC performs the handover together.

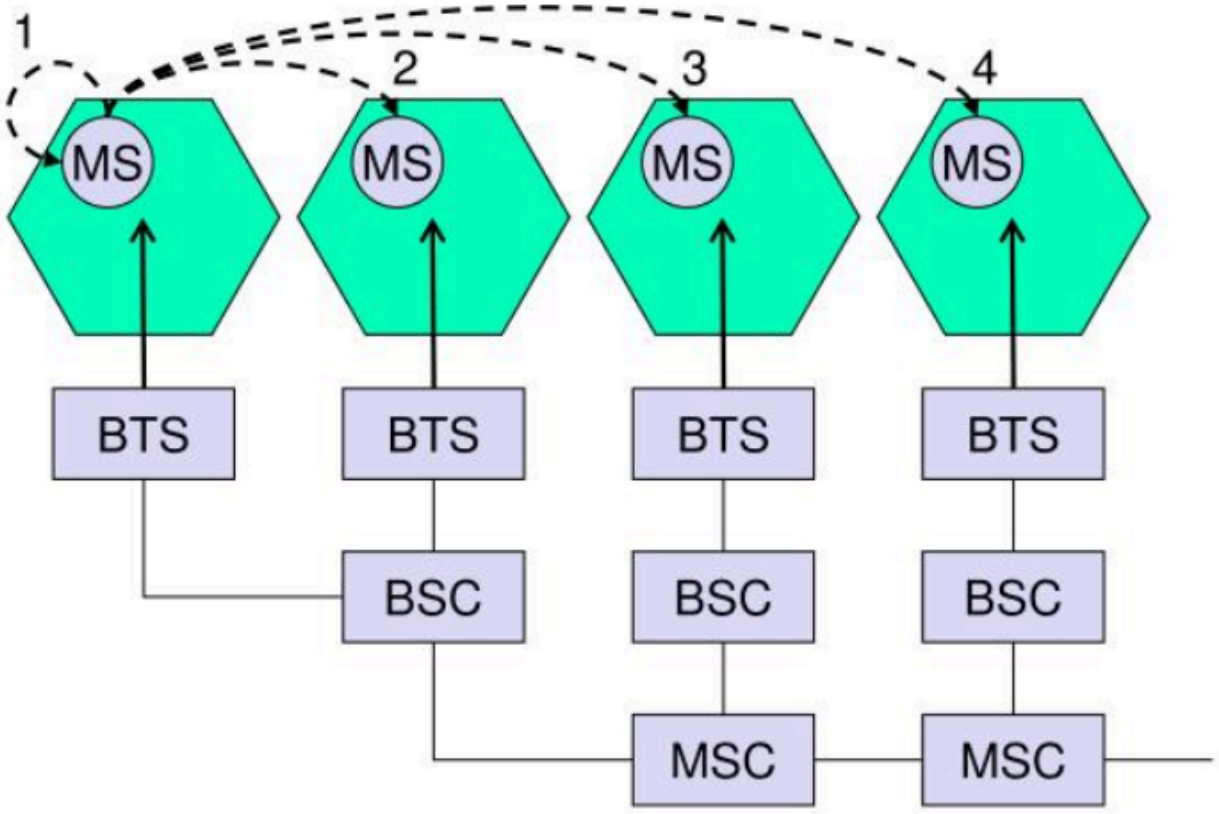


### Adaptive Power Control System

- BS uses $10 \text{ to } 100 \text{ att}$ and MS uses $0 \text{ att}$
- MS is **close to BS, it needs a less transmission power**. High Transmission power when MS is far from BS.
- Depending on its position from BS, **MS needs to control** its transmission power.
- Adaptive power control is **efficient for battery.**

### Why uplink frequency is lower than downlink frequency?

- Mobile is operated on a **battery with low power and therefore it sends signals on low (uplink)** frequencies whereas a **base station is driven by high power and can easily sends signals on high (downlink)** frequency
- A MS cannot afford to transmit at high power to **compensate for this loss**, it must transmit on a lower frequency
- Mobile-to-basestation (uplink) frequency  basestation-to-mobile (downlink)

- ***Friis*** **Equation** can verify that **Transmitter Power  Transmitted Frequency**
  - The **Friis equation** describes how much power is received by an antenna from another antenna that is transmitting a signal over free space.
  - $P_r = P_{ttr}(\frac{c}{4_r f_0})^2$, $P = \text{ower}, = \text{ain}, = \text{istance}$

### Control Channel

In radio communication, a control channel is a **central channel** that **initiates cells**.
In GSM networks, control channels can be divided into  **categories**

1. Broadcast Control Channel (BCCH)
2. Common Control Channel (CCCH)
3. Dedicated Control Channel (DCCH)

### Traffic Channel

Traffic channel in GSM **carry user speech or data** as **other technology**. GSM has **two types** of traffic channels.

1. **TCH/FS (Full rate speed) :** $1$ kbps data rate
2. **TCH/HS (Half rate speed) :** Relatively low data rate. **Two** $S$ channel use in one physical channel.

GSM uses $2$ frame multi-frame structure.

### GSM FDMA and TDMA Calculation

**Frequency Allocation and Multiple Access Techniques (FDMA) in GSM**
The uplink band in GSM has a total of $2\ \mathrm{H}$ of bandwidth and each radio channel has an assigned bandwidth of $200\ \mathrm{H}$.

The number of radio channels $\mathrm{F}$ is,
$N_{\text{channels}} = \frac{2\times 10\mathrm{H}}{200\times 10\mathrm{Hhannel}} = 12 \text{ channels}$

In practice, GSM uses $124$ channels actually. One channel used as **guard band.**

For GMS 900, the uplink and downlink frequency bands are $0 \text{ to } 1\ \mathrm{H}$ and  $\text{to } 0\ \mathrm{H}$.

**TDMA**
Each channel is divided into  $\text{time slots}$. So, maximum numbers of users $(TMA)$,
$N_{\text{users}} = 124 \times\ = 2 \text{ users}$
[ One frame =  slots ]

One time slot duration, =  $\mu s$ , from this $\mu s$ used as guard space.
Total time duration of a frame =  $\times\ = 41 \text{ milisecond}$

**GSM TDMA frame, slots and bursts/GSM Frame Structure**

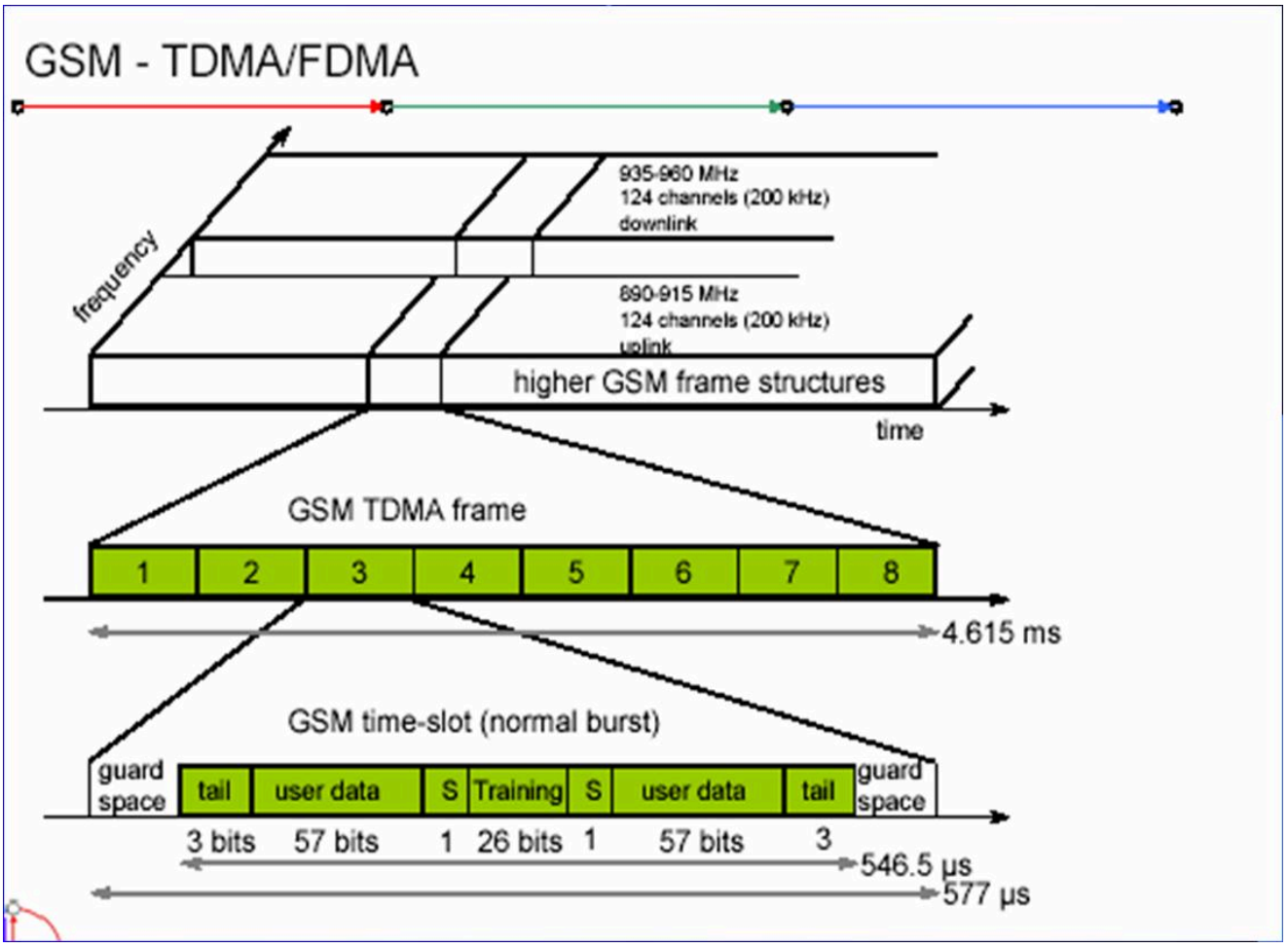


**GSM Frame Structure**

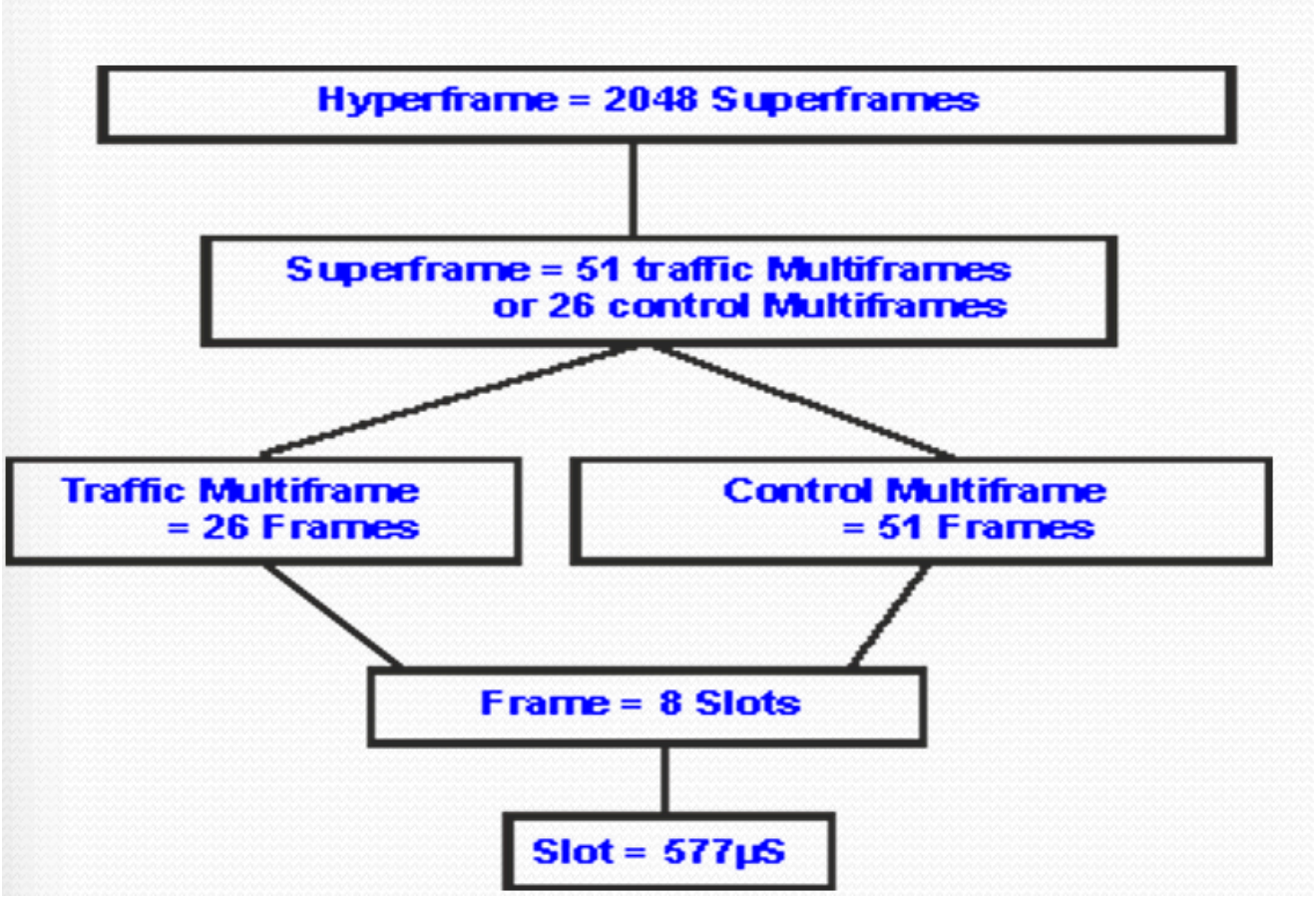

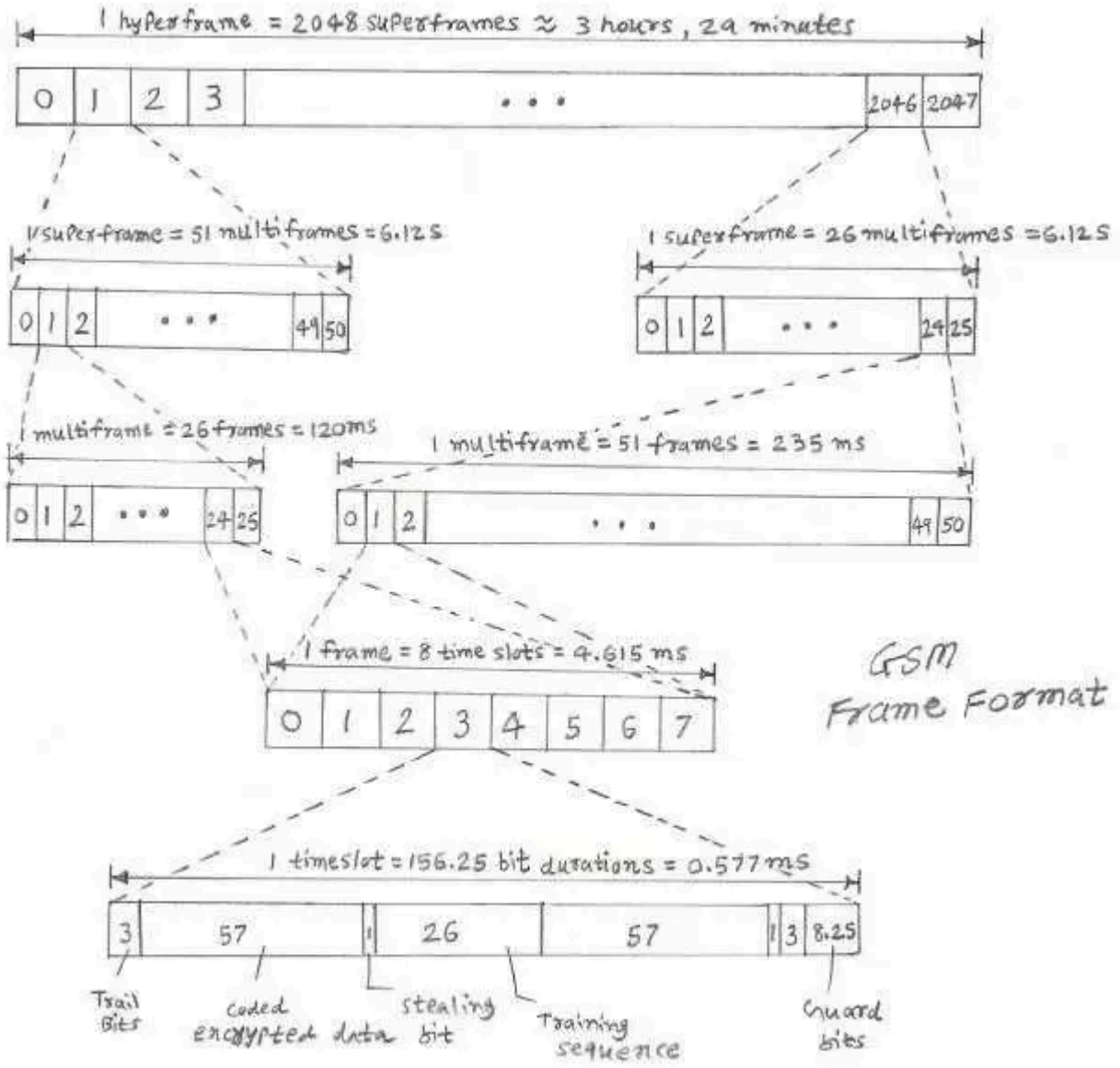


**GMS Protocol Layer**

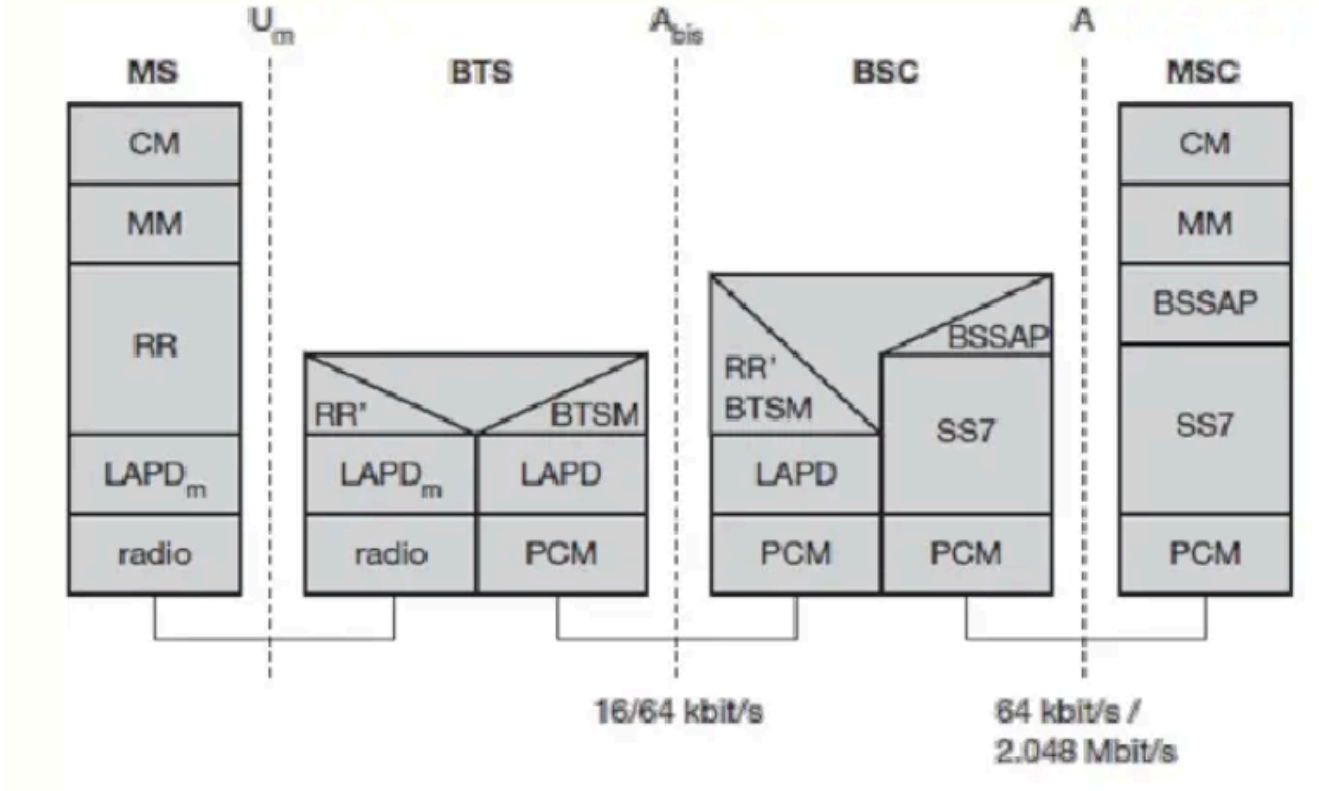


**Mobile Terminated Call (MTC)**

- 1: calling a GSM subscriber
- 2: forwarding call to GMSC
- 3: signal call setup to HLR
- 4, 5: connect with current VLR
- 6: forward responsible MSC to GMSC
- 7: forward call to current MSC
- 8, 9: get current status of MS
- 10, 11: paging of MS
- 12, 13: MS answers
- 14, 15: security checks
- 16, 17: set up connection

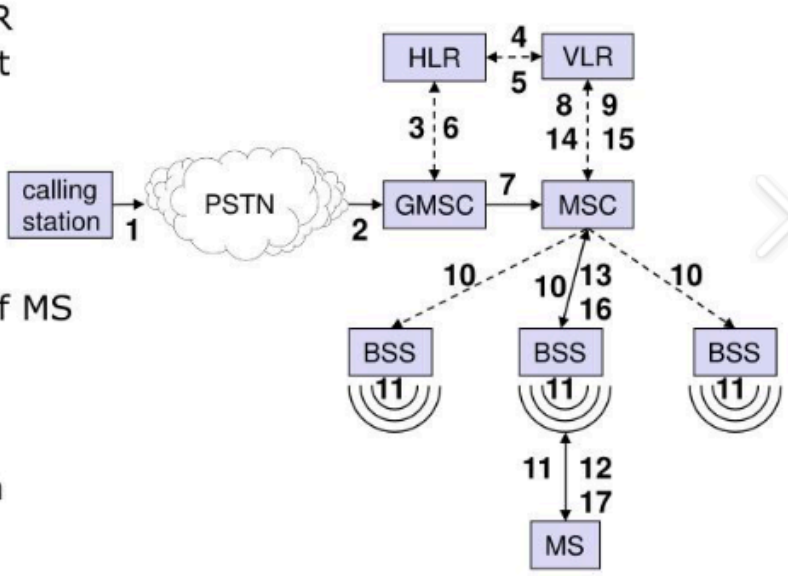

**Mobile Originated Call (MOC)**

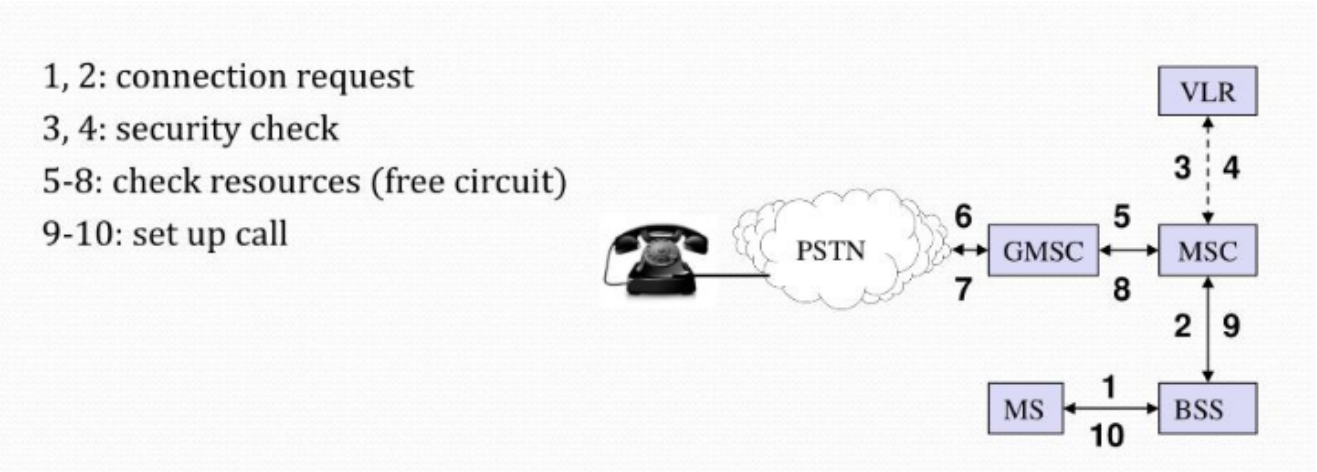


## GPRS (General Packet Radio Service)

GPRS is a mobile **data communication standard** that enables the transmission of **packet-switched data over GSM** network. It is often referred to as 2 **technology.**
Launched in 2000-2001.
**Application :** Internet browsing, Email, Wireless Application Protocol (WAP), SMS, MMS
**Data Transmission:** Information is broken into small packet and transmitted across the network.
**GPRS Architecture**

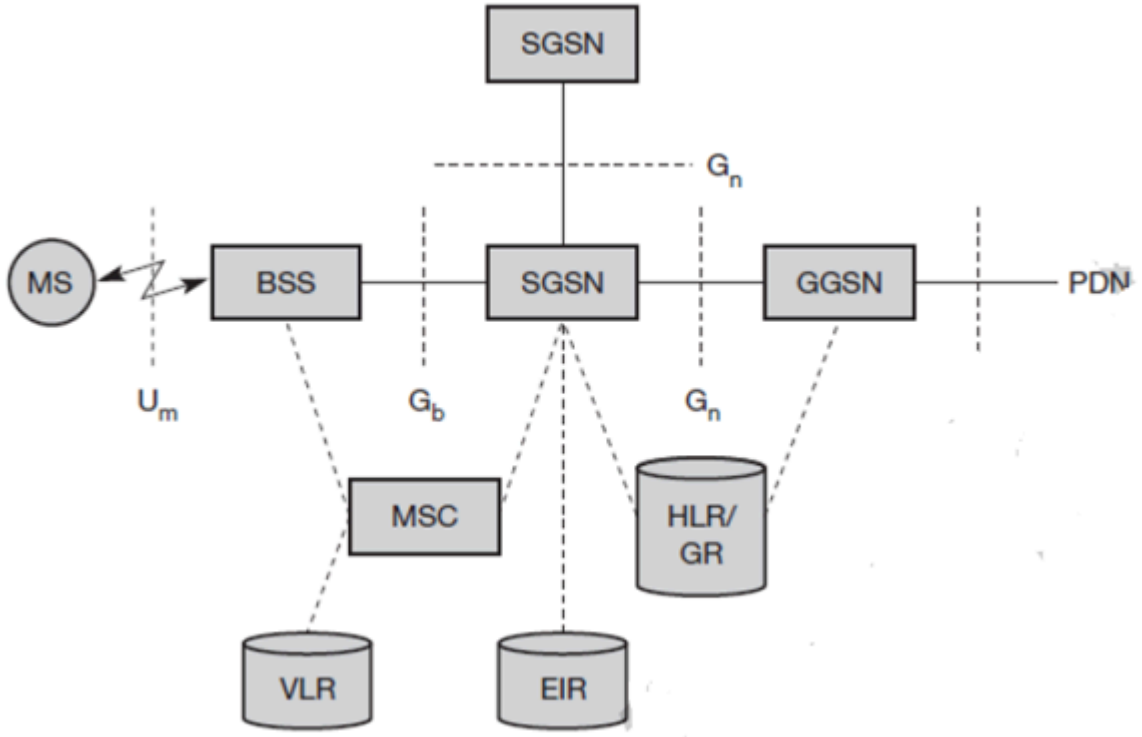


SGSN = Serving GPRS Support Node
GGSN = Gateway GPRS Support Node
GR = GPRS Register
PDN = Public Data Network

| Based On | GSM | GPRS |
|---|---|---|
| **Generation** | 2G | 2.5G |
| **Switching** | Circuit-switching | Packet-switching |
| **Main Use** | Voice, SMS | Data Services (Internet, MMS, apps) |
| **Speed** | 2 kbps | – 114 kbps |
| **Efficiency** | Less efficient | More efficient for data |

### UMTS (Universal Mobile Telecommunication System) UMTS overview

UMTS is a third-generation (3G) mobile **cellular system standardized** by the 3rd Generation Partnership project (**3GPP**). It provides a complete network architecture that **integrates radio access, core network and service capabilities** to deliver voice, data and multimedia service (streaming, mobile internet and video calling).

**UMTS System Architecture**

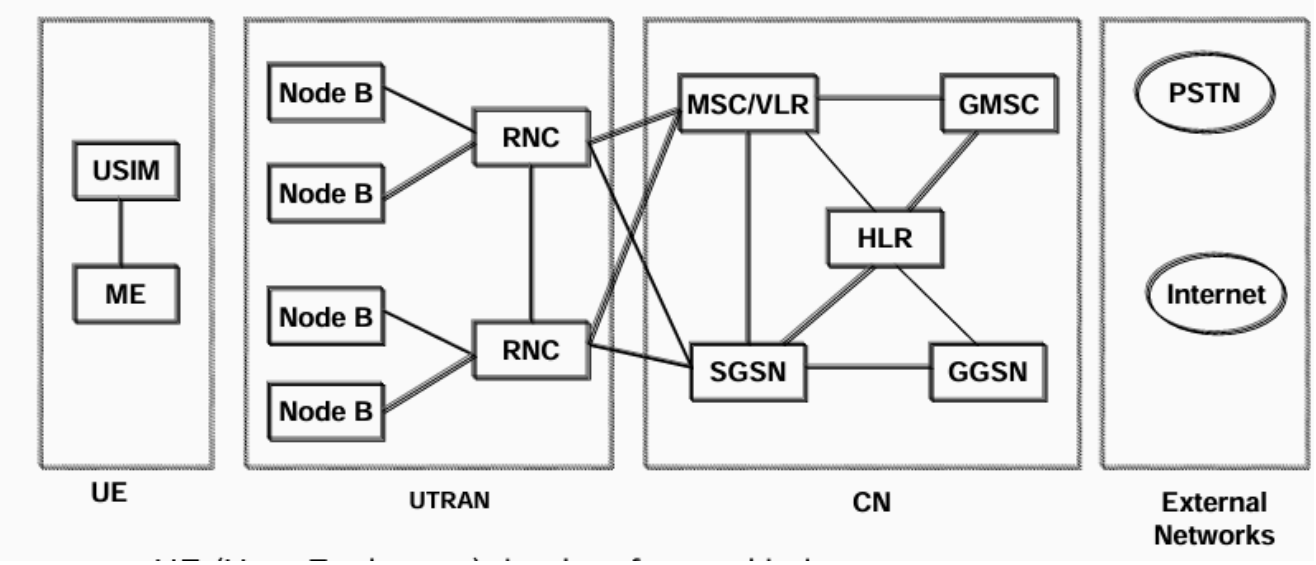


**UE(User Equipment)** that interfaces with the user

- **ME (Mobile Equipment):** is the single or multimode terminal used for radio communication.
- **USIM (UMTS Subscriber Identity Module):** is a **smart card** that holds the subscriber **identity, subscribed services, authentication and encryption** keys.
  **CN (Core Network)** is responsible for transport functions such as **switching and routing calls and data, tracking user.**
- **HLR (Home Location Register):** Database located in the user's home system that stores the master copy of the user's service profile. The HLR also stores the UE location on the level of MSC and SGSN
- **3G MSC/VLR:** Switch and database that serves the UE in its current location for Circuit Switched (CS) services. The MSC function is used to switch the CS transactions, and VLR function holds a copy of the visiting user's service profile, as well as more precise information on the UE's location within the serving system.

- **3G GMSC (Gateway MSC):** Switch at the point where UMTS is connected to external CS networks. All incoming and outgoing CS connections go through GMSC.
- **3G SGSN (Serving GPRS Support Node):** Similar to that of MSC / VLR but is used for Packet Switched (PS) services. The part of the network that is accessed via the SGSN is often referred to as the PS domain. Upgrade version of serving GPRS support node.
- **3G GGSN (Gateway GPRS Support Node):** Functionality is close to that of GMSC but is in the relation to PS services. Upgraded version of gateway GPRS support Node

**UTRAN (UMTS Terrestrial Radio Access Network)**

UTRAN is the radio part of a 3G mobile network, component of the UMTS. It is responsible for handling all radio-related functions between mobile devices (UE) and the core network.

**UTRAN Architecture**

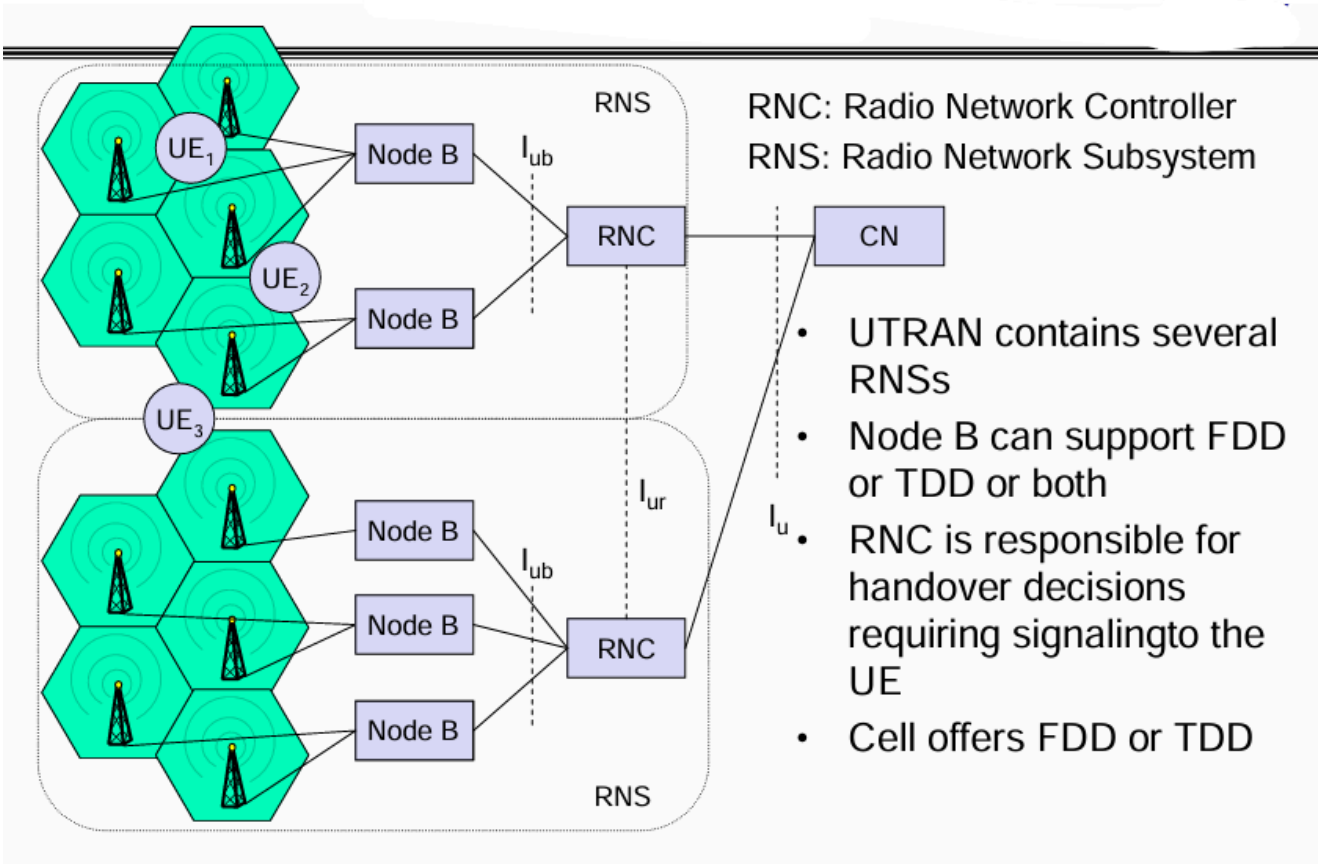


1. **Node B:**
    1. Equivalent to **BTS** in GSM/GPRS
    2. Performs the air interfaces processing
    3. Can operate a group of antennas/radios
2. **RNC (Radio Network Controller)**
    1. Equivalent to GSM **BSC**
    2. Responsible for radio resource management and control of the Node B's
    3. Handoff decisions, congestion control, control encryption, admission control, protocol conversation

***Four* interfaces are used in UTRAN architecture**

1. $_u$ : The interface is an **external interface** that connects the **RNC to CN**. The CN and this interface are separated into **two logical domains:**
    1. **Circuit Switched Domain ($S$)**
        1. Circuit switch service including signaling
        2. Resource reservation at connection setup
        3. 3G versions of GSM components (MSC, GMSC, VLR, HLR)
        4. **That uses the interface $_uS$**
    2. Packet Switched Domain ($PS$)
        1. Handles all packet data services
        2. 3G versions of GPRS components (SGSN, GGSM)
        3. That uses the interface $_uPS$
2. $_{ub}$ This interface is an **internal** interface that connects **RNC to Node B.**
3. $_{ur}$ This interface is an **internal** interface that **connects two RNCs** with each other.
4. $_u$ This interface is an **external** interface that connects the **Node B to UE**.

**Real life example:**

1. Your phone (UE) sends signals via $U_u$ interface to the nearest tower (Node B).
2. The tower forwards signals via $I_{ub}$ interface to the RNC.
3. The RNC sends signals via $I_u$ interface to the Core Network (where internet servers or call processing happens).
4. If you travel from Dhaka to Chattogram, the handover between two RNCs happens via $I_{ur}$ interface.

| Feature | GSM (BSS) | UMTS (UTRAN) |
|---|---|---|
| **Base Station** | BTS (Base Transceiver Station) | Node B |
| **Controller** | BSC (Base Station Controller) | RNC (Radio Network Controller) |
| **Air Interface** | TDMA (Time Division Multiple Access) | WCDMA (Wideband CDMA) |
| **Data Capability** | Limited (up to EDGE speeds) | Higher (UMTS/HSPA speeds) |

**WDCMDA (Wideband CDMA)**

Wideband Code Division Multiple Access is a **third-generation (3G) wireless air interface** standard that uses CDMA techniques over a wide bandwidth ($\mathrm{H}$ channels). It is the primary radio access technology of UMTS. **It connects mobile devices (UE) to the UTRAN.**

**Difference between WDCMA and GSM**

| Feature | GSM | WDCMA |
|---|---|---|
| **Network Generation** | 2G | 3G |
| **Full Form** | Global System for Mobile Communication | Wideband Code Division Multiple Access |
| **Usage Propularity** | No longer used a lot | Commonly used in all kinds of mobile phone. |
| **Efficiency** | Poor | Better than GSM |
| **Speed** | Slower (Up to  kbps, Edge: ~ $4$ kbps) | Faster (Up to $4$ kbps, several Mbps with HSPA) |
| **Compatibility** | Doesn't support GSM. | Support WCDMA |
| **Carrier Spacing** | $200\ \mathrm{H}$ | $\mathrm{H}$ |
| **Network Quality Depender** | Depended on frequency planning | Radio Mangement |
| **Channel Usage** | One channel  users sequentially. ($1$ time slow $=$ $\mu s$) | Several Users use the same channel at same frequency but different codes. |
| **Power Control Requirement** | No extra power control is needed | Must need |
| **Frequency Reuse Factor** | FRF = $-1$ for BCCH, $2-4$ for TCCH | FRF=1 |
| **Main Services** | Voice calls, SMS, basic data | Voice, video calls, mobile internet, multimedia |
| **Switching Method** | Packet Switched (data), circuit-switched (voice) | Circuit-switch only |

**Difference between UMTS and WCDMA**

| Feature | UMTS | WCDMA |
|---|---|---|
| **Full Form** | Universal Mobile Telecommunication System | Wideband Code Division Multiple Access |
| **Speed** | Faster | Slower |
| **Technology Type** | Cellular | Radio |
| **Channel Foundation** | Basic channel is GSM | Basic channel is CDMA |
| **Coverage Area** | Less | More |
| **Device Compatiblity** | Not possible to utilize communication devices with just | Most phone uses WCDMA and GSM, UMTS are included |

| Feature | UMTS | WCDMA |
|---|---|---|
| | UMTS. | in the mix. |
| **Transmission Data Rate** | It is a 3G broadband communication system. Packet based transmission of text, videos, digitized voice at data rate up to $2\ \mathrm{mbps}$ | WCDMA is based on CDMA. It utilizes two $\mathrm{H}$ channel, one for uplink and another for downlink. Data rate is same as UMTS |
| **Development Role** | Developed by 3GPP as a successor to GSM | Developed as the air interface for UMTS |
| **Network Architecture Role** | UTRAN and CN | Forms the basis of UTRAN's radio interface. |
| **Switching Method** | Supports both circuit-switched and packet switched services | Focuses on packet-switched data transmission. |

**Spreading and Scrambling Technique**
**Two Steps:**

1. **Channelization or Spreading Code:** A data bit is mixed with a high-speed code (PRN/Pseudo-Random Noise code or Channelization code). The signal is spread over a wide frequency band so that it stays below the noise level and is harder to detect.
    1. **Spreading Factor ($SF$) :** The number of **chips per bits** is spreading factor and define the data service the user.
    $T_{\text{chip}} = \mathrm{F} \times T_{\text{bit}}$
    2. **For :** $\mathrm{it\ ate} \times \mathrm{F} = 4\mathrm{chips}s$ (Chip rate)
    3. **Channelization Code:** The channelization codes are also called Orthogonal Variable Spreading Factor $(\mathrm{F})$ codes. It preserves the orthogonality between a user's different physical channels. *Imagine you are sending a secret message. You break it into many small pieces and scatter them in different places. Only those who have the correct code can reassemble it.*
2. **Scrambling Technique:** Data bits are rearranged randomly using a Scrambling Code. Makes the signal more secure and reduces interference.
Scrambling happens at the chip rate of the signal processing. Since the chip rate of **scrambling code is the same as the chip rate of the $\mathrm{F}$ code**, scrambling does not change the data rate. A specific sequence which is used for scrambling is called "Scrambling Code". It can improve synchronization. The main rate of scrambling code is to separate multiple signals from each transmitter.

    *Imagine you are sending a message but shuffle the words randomly. Only those with the correct code can put them back in the right order.*

**The $F$ codes are arranged in a tree structure in UMTS/WCDMA:**

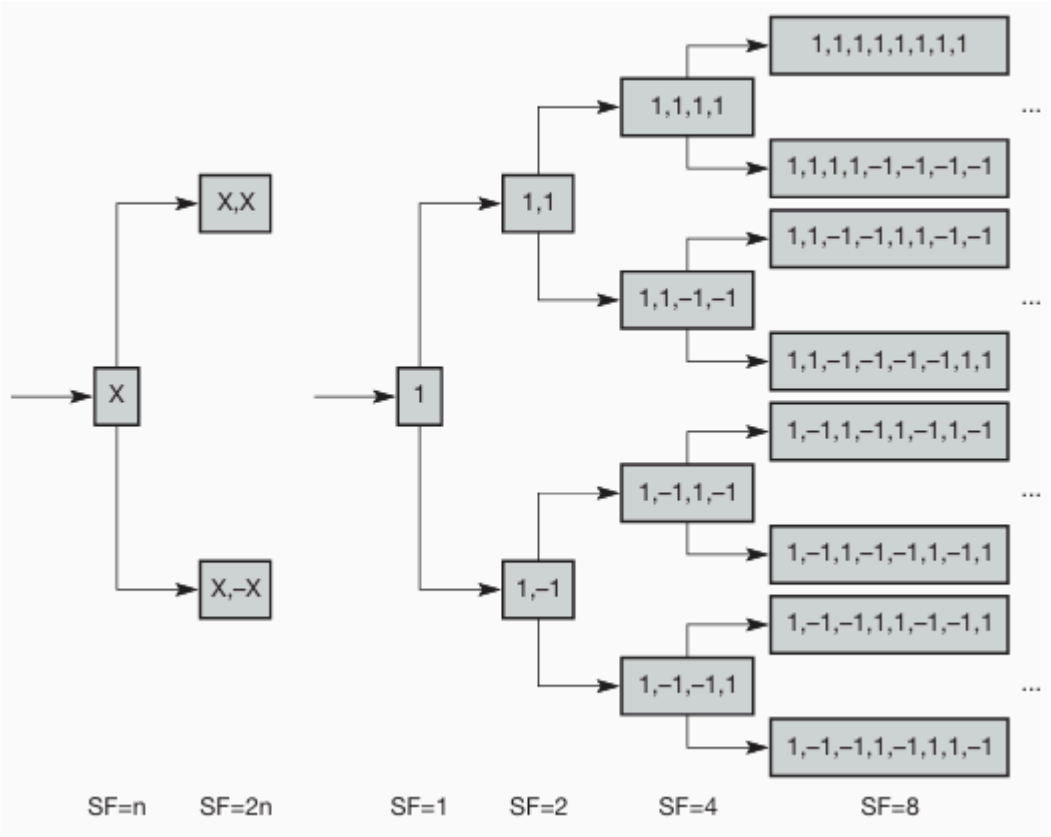


**The overall spreading and scrambling process in UMTS/WCDMA**

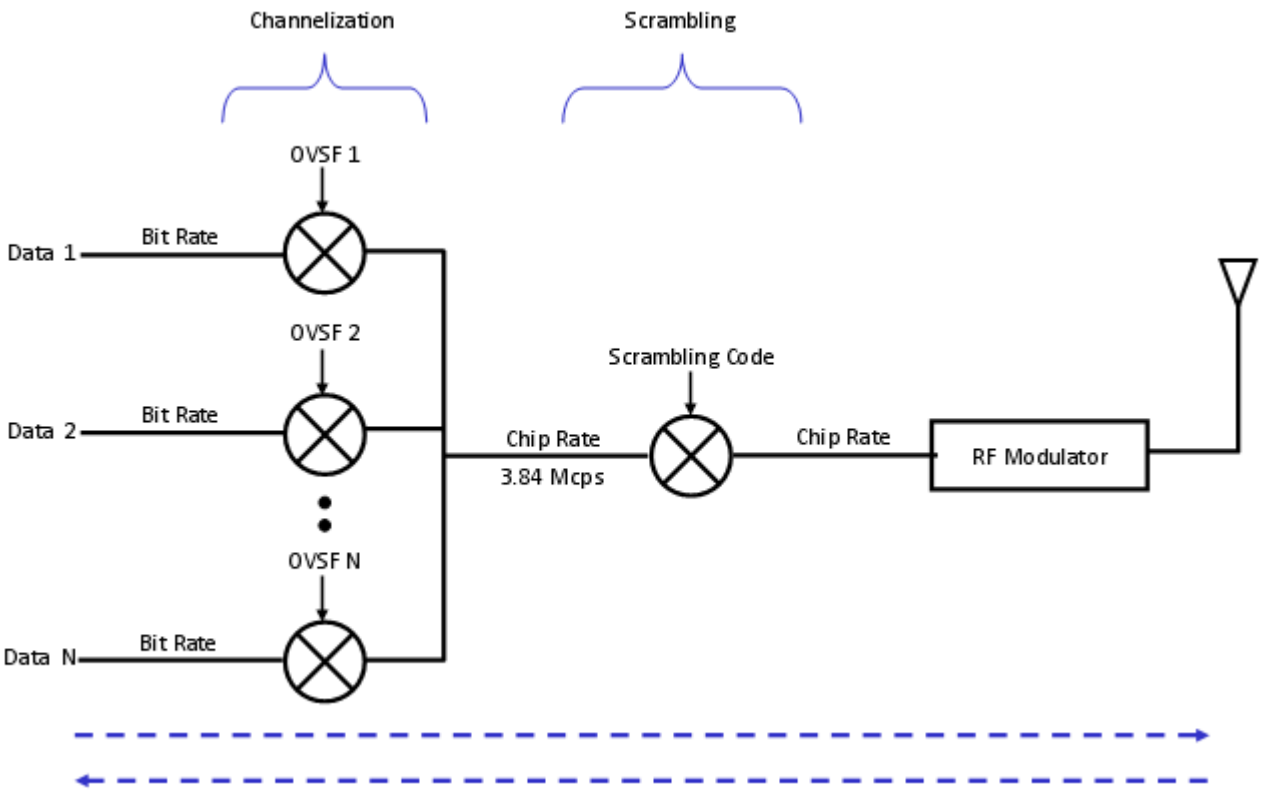


## TCP/IP in Wireless Communication

TCP/IP (Transmission Control Protocol/Internet Protocol) is the **foundational** suit of communication protocols used to **connect devices on the internet** and other networks. It

defines how data is packaged, addressed, transmitted, routed and received across networks.

**Layers**

1. **Physical Layer** : Converts digital bit stream into physical signals and vice-versa.
    1. **Wireless Rule**
        1. Frequency selection
        2. Signal direction
        3. Modulation
        4. Encryption
    2. **Protocols**
        1. Ethernet (IEEE - International Electrical and Electronic Engineering)
        2. IEEE 02
        3. IEEE 0211
        4. IEEE 021
        5. FDDI (Frame Distribution Data Interface)
        6. Token ring
2. **Data Link Layer** : Manages **direct communication between devices** on the same network.
    1. **Wireless Role**
        1. Media access control
        2. Multiplexing
        3. Error correction
        4. Synchronization of data frame
        5. Ensure reliable point-to-point or point-to-multipoint links
    2. **Protocols**
        1. SDLC (Synchronous Data Link Control)
        2. HDLC (High Level Data Link Control)
        3. PPP (Point to Point Protocol)
        4. LCP (Link Control Protocol)
        5. MAC (Media Access Control)
3. **Network Layer** : Handles **routing and addressing** of data packets.
    1. **Wireless Role**
        1. IP addressing
        2. Routing between devices
        3. Device location tracking
        4. Network handover
    2. **Protocols**
        1. ARP (Address Resolution Protocol)
        2. ICMP (Internet Control Message Protocol)

        3. $P_4$ (Internet Protocol version 4) [ $2$ bits ]
        4. $P$ (Internet Protocol version 6) [ $12$ bit ]
        5. Token Right
4. **Transport Layer:** Provides end-to-end communication and data-integrity.
    1. **Wireless Role**
        1. Flow control
        2. Congestion Control
        3. Quality of Service ($S$)
        4. Supports protocols like TCP and UDP
    2. **Protocols**
        1. TCP (Transmission Control Protocol)
        2. SCTP (Stream Control Transmission Protocol)
        3. UDP (User Datagram Protocol)
        4. RUDP (Reliable User Datagram Protocol)
        5. TLSP (Transport Layer Security Protocol)
5. **Application Layer** : Interfaces directly with user applications.
    1. **Wireless Role**
        1. Hosts services like multimedia streaming, location-based service, wireless access
        2. Support high data rate and low latency apps
    2. **Protocols**
        1. FTP
        2. NFS
        3. SMTP
        4. SNMP
        5. HTTTP
        6. DNS

### Layer Model **(Just in another way)**

A layer model is a **conceptual framework** that **standardizes** the function of a **communication system into separate layers**.

**Layers Structure and their functions**

1. **Application layer** : The application layer **delivers services directly to the mobile user**, including *voice calls, SMS, multimedia streaming* etc. It **defines protocols and interfaces that enable user interaction** with the mobile communication system.
    1. Service location
    2. New application multimedia
    3. Adaptive applications

2. **Transport Layer** : The transport layer **provides end-to-end communication** between **mobile devices and servers**. It ensures *reliable delivery, error recovery, segmentation and flow control*, typically implemented through protocols such as **TCP and UDP.**
    1. Quality of service
    2. Flow of control
3. **Network Layer** : The network layer is responsible for logical addressing, routing and mobility management. It ensures that data packets are delivered across different cells and networks, supporting handovers, roaming etc.
    1. Addressing, routing, device location
    2. Handover
4. **Data Link Layer** : The data link layer provides **reliable data transfer** across the wireless physical medium. It manages *framing, error detection and correction,* ensures that multiple *mobile users can share the same **radio spectrum efficiently** without collision.*
    1. Authentication
    2. Media access
    3. Multiplexing
    4. Media access control
5. **Physical Layer :** The physical layer is **responsible for transmission and reception of raw bit streams** over the radio channel. It defines *modulation scheme, frequency allocation, power control, channel coding and antenna specifications* to ensure reliable propagation of signals in wireless environment.
    1. Encryption
    2. Modulation
    3. Interference
    4. Attenuation
    5. Frequency

Adhoc
IEEE Architecture

### Hidden and Exposed Terminal Problem

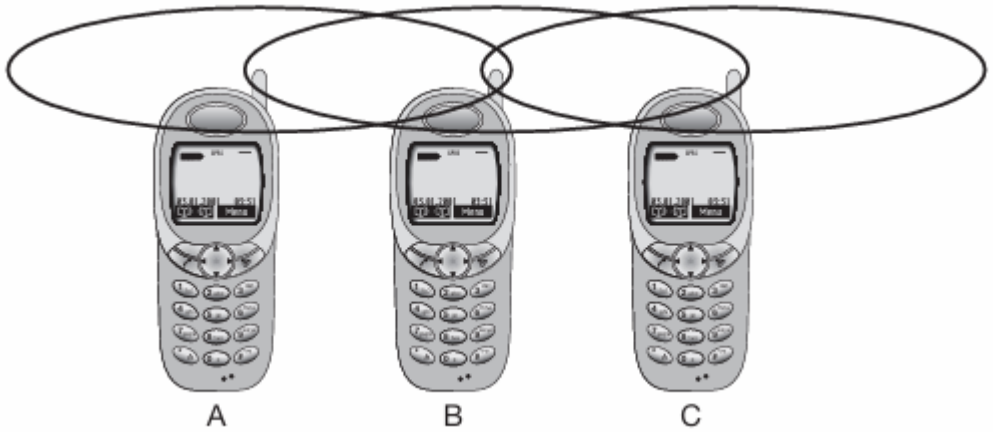


The transmission range of $A$ reaches $B$, but not . The transmission range of  reaches $B$, but

not $A$. The final transmission range of $B$ reaches $A$ and , $A$ cannot detect  and vice-versa.

**Hidden Terminal Problem :** The hidden terminal problem occurs when two nodes are unable to detect each other's transmissions because they are out of range of one another, yet both are within in the same common receiver. This can lead to **collisions** when both nodes attempt to send data to the receiver simultaneously, resulting in **garbled messages**. **A starts sending to B**, C does not receive this transmission. **C also wants to send something to B** and senses the medium. The **medium appears to be free**, the carrier sense fails. C also starts sending causing a collision at B. But A cannot detect this collision at B and continues with its transmission. **A is hidden for C** and vice versa.

**Exposed Terminal Problem:** The exposed terminal problem arises when a node is prevented from transmitting because it incorrectly assumes that another ongoing transmission will interfere with its communication.
While hidden terminals may cause collisions, the next effect only **causes unnecessary delay**. Now consider the situation that $B$ **sends something to** $A$ and  **wants to transmit data to some other mobile phone outside** the interference ranges of $A$ and $B$ . C **senses the carrier** and detects that the carrier is busy ($B$'s signal).  postpones its transmission until it detects the medium as being idle again. But as $A$ is outside the interference range of , waiting is not necessary. Causing a 'collision' at $B$ does not matter because the collision is too weak to propagate to $A$. In this situation, **C is exposed to B.**

### Near and Far Terminals Problem

The *near and far terminals* concept refers to the near-far problem in wireless communication, particularly in CDMA systems. This problem occurs when **two terminals attempt** to transmit **simultaneously**, leading to mutual **interference where the stronger signal** from a closer terminal can drown out the weaker signal from a farther terminal

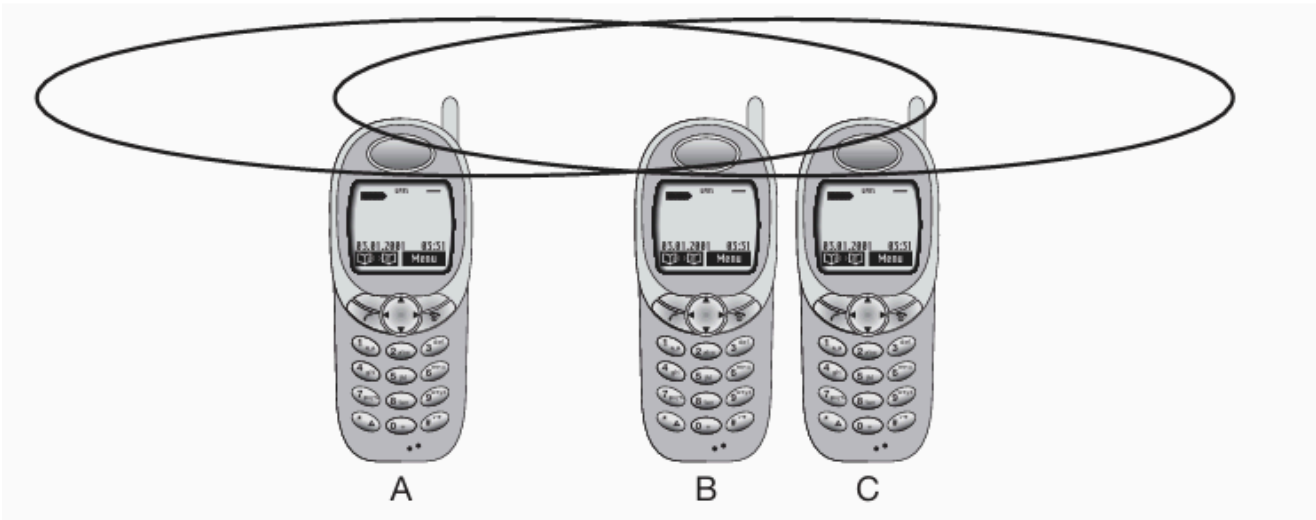


$A$ and $B$ are both sending with the same transmission power. As the signal strength **decreases proportionally to the square of the distance**, $B$***'s signal drowns out*** $A$***'s signal***. As a result,  cannot receive $A$'s transmission. Now think of  as being an arbiter for

sending rights. In this case, terminal $B$ would already drown out terminal $A$ on the physical layer.  in return would have no chance of applying a fair scheme as it would only hear $B$. The near/far effect is a severe problem of wireless networks using CDMA. All signals should arrive at the **receiver with more or less the same strength**. Otherwise a person standing closer to somebody could always speak louder than a person further away.

## MACA (Multiple Access with Collision Avoidance)

### Maca for hidden terminal problem

It solves the hidden terminal problem, does not need any base station.

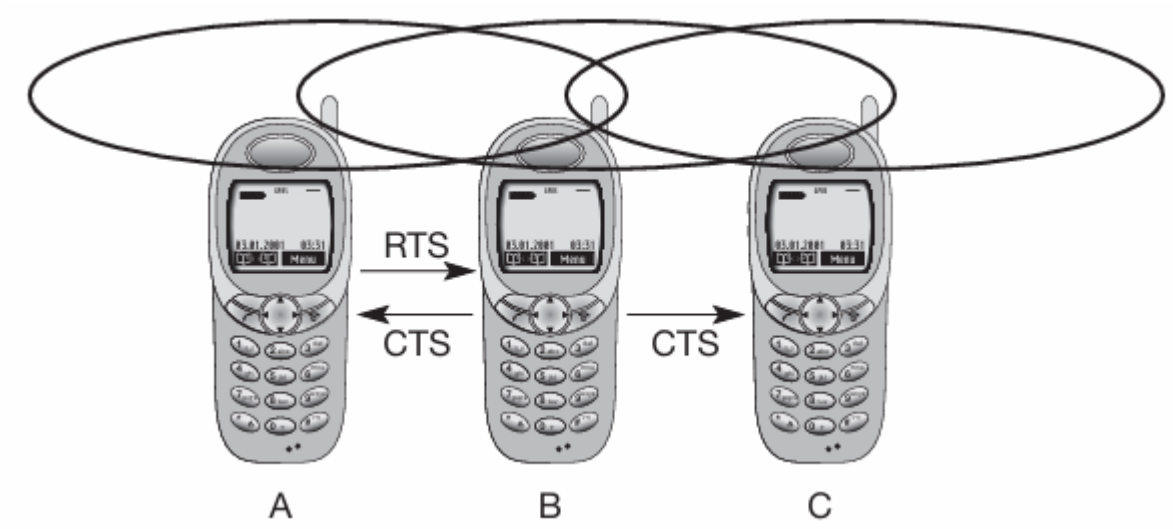


1. With MACA, $A$ does not start its transmission at once, but sends a request-to-send (RTS) first. $B$ receives the RTS that **contains the name of sender and receiver**, as well as the length of the feature transmission.
2. The RTS is not heard by , but triggers an acknowledgement from $B$, called clear-to-send (CTS). The CTS again contains the names of sender ($A$) and receiver ($B$) of the user data and the length of future transmission. This CTS is now heard by  and the medium for future us by $A$ is now reserved. After receiving, a CTS,  is not allowed to send anything for the duration indicated in the CTS towards $B$ .
   A collision cannot occur at B during data trans mission, and the hidden terminal problem is solved – provided that the transmission conditions remain the same.

Still, collisions can occur during the sending of an RTS. Both A and C could send an RTS that collides at B. RTS is very small compared to the data transmis sion, so the probability of a collision is much lower. B resolves this contention and acknowledges only one station in the CTS

**MACA for expose terminal**

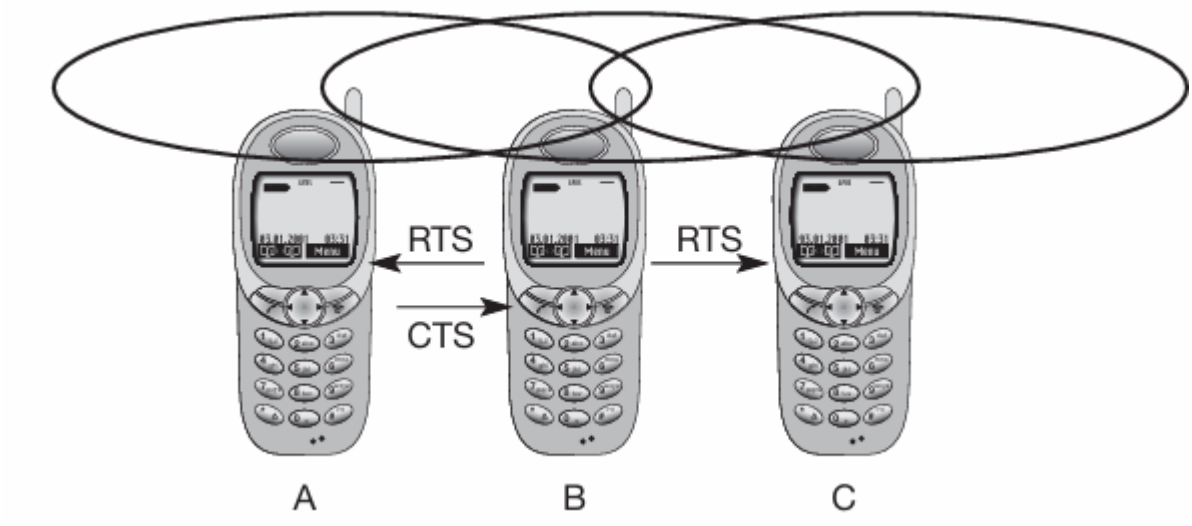


1. With , $B$ transmit an RTS first containing the name of the receiver ($A$) and the sender ($B$ ). **does not react to this message as it is not the receiver**.
2. $A$ acknowledge using a CTS where $A$ is the sender and $B$ is the receiver. doesn't receive this CTS and concludes that $A$ is outside the detection range.
3. can start its transmission assuming it will not cause a collision at $A$. The exposed terminal problem is solved.

## Medium Access Control Layer/Inter Framing Spacing

**MAC layer provides the services**

1. **Control** medium access
2. Offer support for **roaming, authentication**
3. Provide **synchronous data service**
4. Provide **time bounded service**

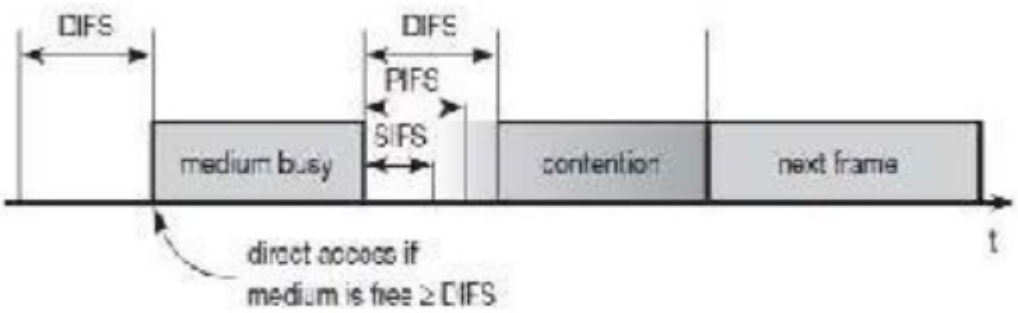


**Figure 2.3 Medium Access and Inter Frame Spacing**

| | SIFS | PIFS | DIFS |
|---|---|---|---|
| **Full Form** | Short Interframe Spacing | PCS Interframe Spacing, (PCF : Point | DCF Interframe Spacing, (DCF : Distributed Coordination Function) |

| | SIFS | PIFS | DIFS |
|---|---|---|---|
| | | Coordination Function) | |
| **Timing** | Shortest time | waiting time between DIFS and SIFS | Longest waiting time |
| **Prioirity** | Highest | Medium | Lowest |
| **Used for** | Acknowledgements of data packets | Bounded service | Asynchronous data service |
| **Defined as** | [ For DSSS $10\mu s$ FHSS $2\mu s$] | SIFS + 1 Slot Time | SIFS + 2 Slot Time |

### IEEE $0211$ hidden node provisions for contention-free access/DFWMAC-DCF with RTS/CTS extension

**DFWMAC : Distributed Foundation Wireless Medium Access Control**
**DCF : Distributed Coordination Function**